ASME STAMP "PP" & "U"

DIN EN ISO 9001

FLOW ELEMENT

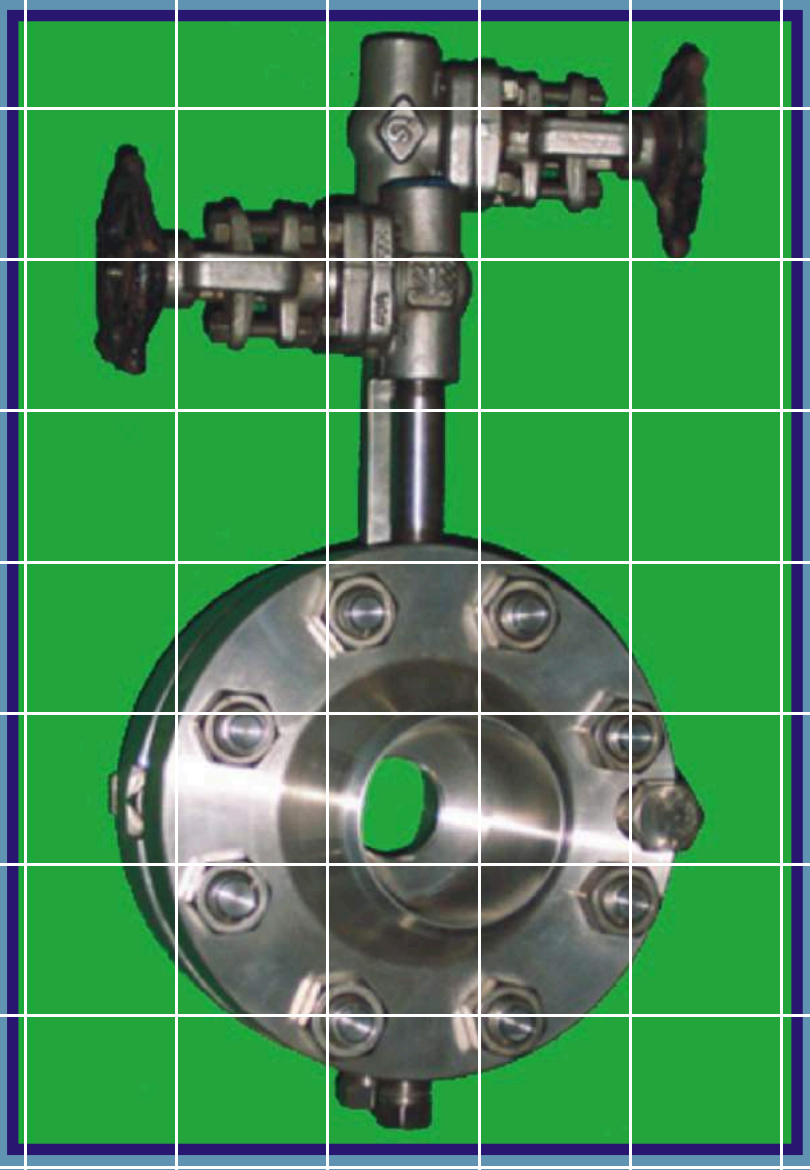

SAMIL INDUSTRY CO.,LTD.

FLOW ELEMENT

SAMIL INDUSTRY CO.,LTD.

CONTENTS

GENERAL FOR PRIMARY DIFFERENTIAL DEVICES ----4

ORIFICE PLATES & FLANGES ----8

ORIFICE PLATES ----9

ORIFICE PLATE WITH RING ----11

ORIFICE PLATE WITH INTEGRAL BLOCK ----12

ORIFICE PLATE WITH RING JOINT ----13

ORIFICE FLANGE & PLATE ASSEMBLY ----14

MULTI BORED ORIFICE ----15

INTEGRAL ORIFICE ASSEMBLY ----22

ORIFICE METER RUN ASSEMBLY ----23

FLOW STRAIGHTENER ----24

RESTRICTION ORIFICE ----25

FLOW NOZZLES ----28

VENTURI TUBES ----36

CONE TYPE FLOW METER ----42

TAPER SEG FLOWMETER & CONDENSATE POT ----48

ENGINEERING DATA ----55

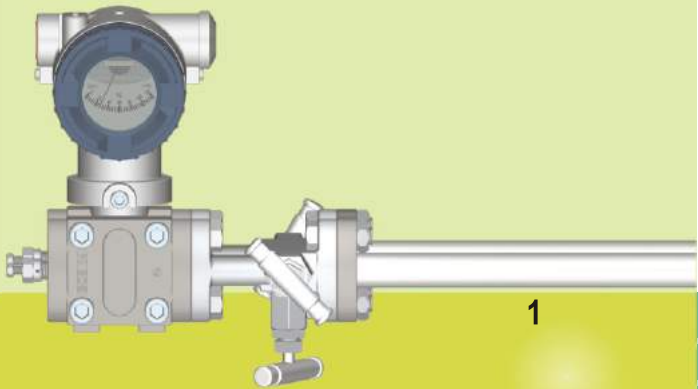





APPLICABLE CODES FOR TAPPINGS AND BORE TYPES

BORE TYPES	APPLICABLE CODES	TAPPINGS
CONCENTRIC	ISO-5167, AGA NO. 3, ASME MFC-3M, L.K.SPINK.	FLANGE
	ISO-5167, ASME MFC-3M, L.K.SPINK.	CORNER
	AGA NO.3, R.W. MILLER, L.K.SPINK.	PIPE[2 1/2D & 8D]
	ISO-5167, ASME MFC-3M L.K.SPINK.	RADIUS[D & 1/2D]
	R.W. MILLER	VENA CONTRACTA
ECCENTRIC	R.W. MILLER, L.K.SPINK.	FLANGE
	BS 1042	CORNER
	R.W. MILLER	VENA CONTRACTA
SEGMENTAL	R.W. MILLER, L.K.SPINK.	FLANGE
	R.W. MILLER	VENA CONTRACTA
QUADRANT	R.W. MILLER, BS 1042, L.K.SPINK.	FLANGE
	R.W. MILLER, BS 1042, L.K.SPINK.	CORNER

CONTENTS

PRIMARY DIFFERENTIAL PRESSURE DEVICES

SAMIL INDUSTRY CO.,LTD.

 Orifice Plate	 Orifice Plate with Octagonal Ring	 Orifice Plate with Oval Ring
 Orifice Assembly	 Orifice Plate with Ring	 Orifice Plate with Integral Block
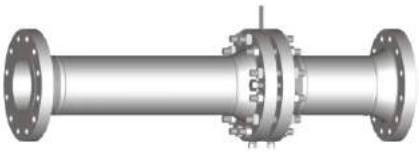 Orifice Meter Run Assembly	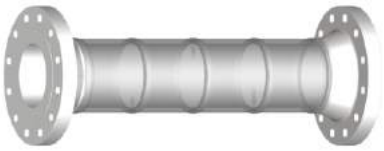 Multi-Stage Restriction Orifice Ass'y	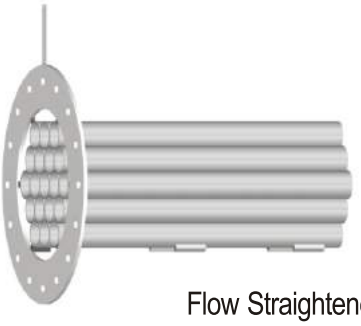 Flow Straightener
 Weld-in Type Flow Nozzle	 Welded Type Venturi Tube	 Tetragon Duct Type Venturi
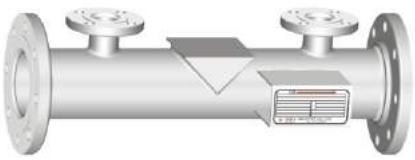 Taper Seg Tube	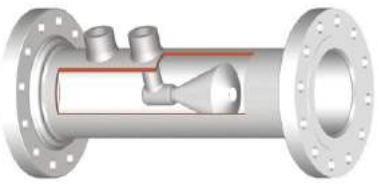 Cone Type Flow Meter	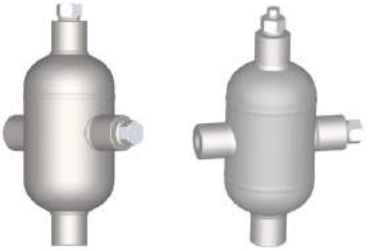 Condensate Pots

SAMIL INDUSTRY CO.,LTD.

ENQUIRY- / ORDER SHEET FOR PRODUCTS

TO : SAMIL INDUSTRY CO.,LTD.	FROM :
WEB PAGE : www.samilind.co.kr	WEB PAGE :
E - MAIL : samilind79@samilind.co.kr	E - MAIL :
TEL NO. : 82-2-2618-2000 ~4, 82-32-819-9671 ~ 7	TEL NO. :
FAX NO. : 82-32-819-9693 ~4	FAX NO. :

We are pleased to receive this enquiry- / order sheet for products from your company.

SPECIAL REQUIREMENTS :

OUTLINE DRAWING [IF NECESSARY] :

http//:www.samilind.co.kr

GENERAL - 1

IN THIS CHAPTER - 1

The purpose of this chapter is to introduce briefly kinds of primary differential pressure devices and its principle. You can also look into the best suitable type fit in with your process conditions by the flowmeter selection table. We will offer the flow elements those items are Measuring Orifice, Restriction Orifice, Flow Nozzle, Venturi Tube, Cone Type flow meter, Taper Seg Tube, Condensate Pot, etc. and will also provide the pitot tube. in conjunction with Pitot Tubes, Consult us.

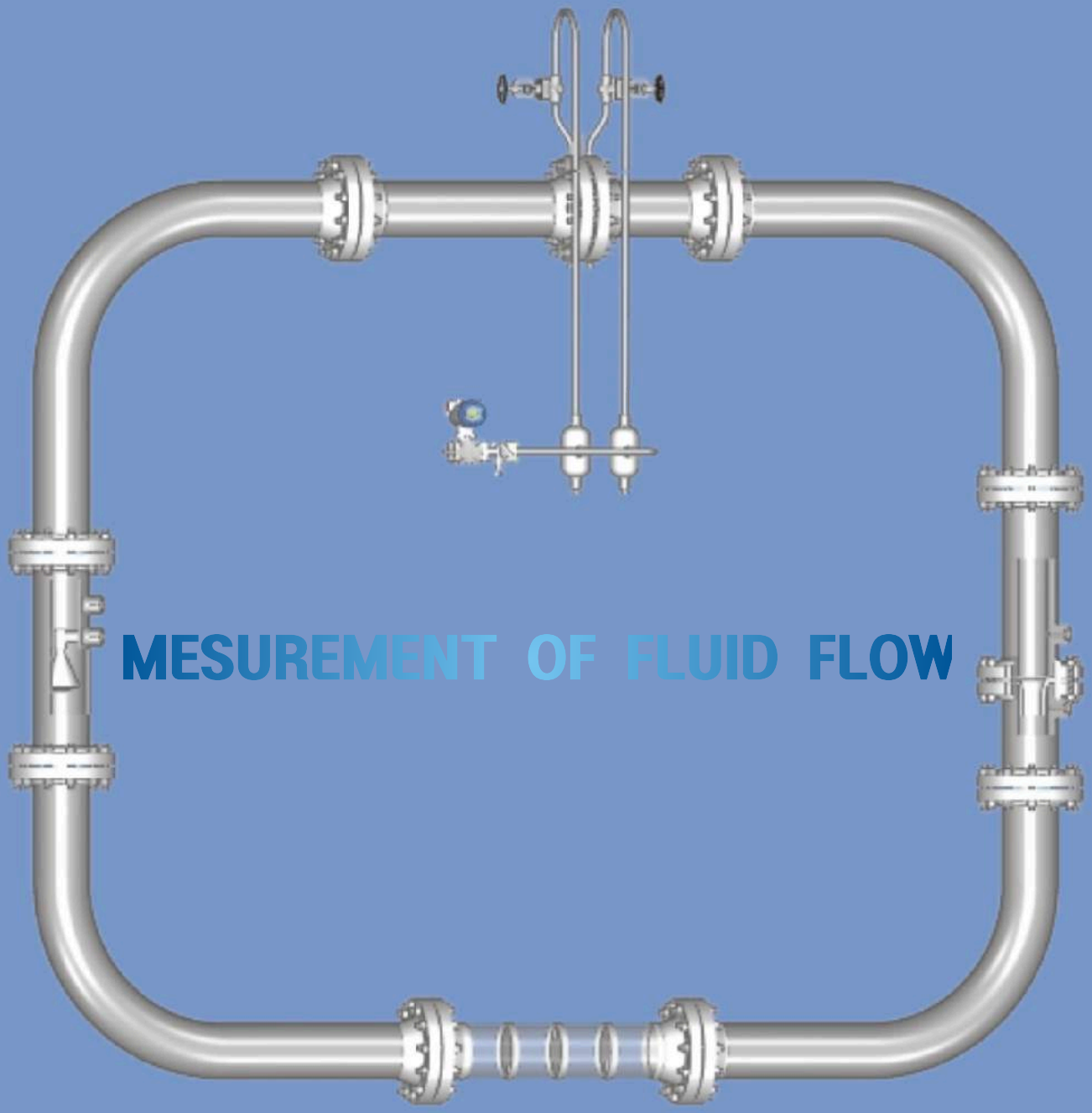

MESUREMENT OF FLUID FLOW

FLOW MEASUREMENT

The most common method of measuring flow is the differential pressure which utilizes restriction elements [Orifice, Flow Nozzle, Venturi Tube, etc.] in a pipe line. Flow rate is proportional to the square root of the differential pressure generated by flow through the restriction. When a fluid flowing through a pipe line passes a throttled part of the pipe line, The flow velocity increases according to the equation of continuity and the pressure decreases according to the Bernoulli's equation, denoting the existence of a close relation between the pressure diffenence and the flow velocity. Based on this relation, the flow rate can be determined by measuring the differential pressure.

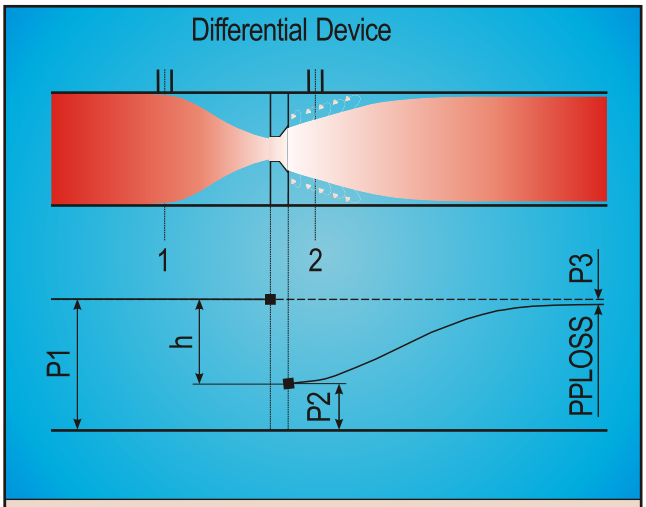

The fluid passing through the section-2 gradually regains its pressure as fluid moves downstream, but the downstream pressure can not be recovered up to the upstream pressure. This loss called the"Permanent Pressure Loss; PPLOSS".

The mass flow rate can be determined by :

$$q_m = \frac{C}{\sqrt{1-\beta^4}} \varepsilon \frac{d^2}{4} \sqrt{2 \Delta P \rho_1}$$

The volume flow rate can be determined by :

$$q_v = \frac{q_m}{\rho}$$

where, C : Coefficient of Discharge
β : Diameter Ratio; d/D
ε : Expansibility Factor
ρ : Fluid Density

A square root relationship

% of Flow	100	90	80	70	60	50	40	30	20
Diff. Pressure	100	81	64	49	36	25	16	9	4

Practical Application of Rangeabilities

95% / 27%	3.5 : 1 Ratio for Control Applications
100% / 20%	5 : 1 Ratio for Indication or Recording

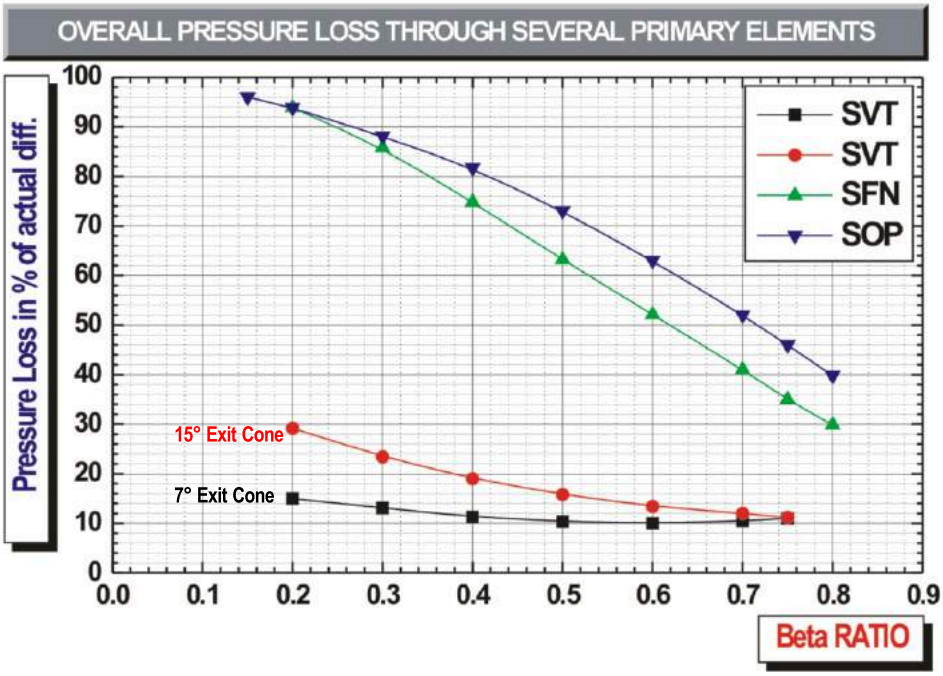

MODELS :

SVT : Venturi Tube
SFN : Flow Nozzle
SOP : Squire Edge Orifice





Categorizing Flowmeters by Process-Dominated Factors :

FLOW METERS \ FLUIDS	Clean Liquids	Dirty Liquids	Corrosive Liquids	Viscous Liquids	Abrasive Slurries	Fibrous Slurries	Low Velocity Flows	Vapor Gas	Hi Temp.Service	Cryogenic Service	Semi-Filled Pipes	Non-Newtonians	Open Channel
Orifice	◉	△	○	○	×	×	◉	◉	◉	◉	×	△	×
Venturi	◉	○	△	△	△	△	△	◉	△	△	×	△	×
Flow Nozzle	◉	△	△	△	△	△	△	◉	△	△	×	△	×
Pitot Tube	◉	△	○	△	×	×	△	◉	△	△	×	×	×

◉ Designed for This Service
△ Applicable for This Service under Certain Condition, Consult SAM IL
○ Normally Applicable for This Service
× Not Applicable for This Service

Flowmeter Selection Table : Flow Measurement Engineering Handbook, RICHARD W. MILLER.

FLOW METERS	Pipe Size [in.]	Gases [vapors]		Liquids						Temperature [°C]	Pressure [psi]	Accuracy un-calibrated [including transmitter]	Reynolds No.
								Slurries					
		Clean	Dirty	Clean	Viscous	Dirty	Corrosive	Fibrous	Abrasive				
Square-Root Scale : Maximum Single Range 4 : 1													
ORIFICE	▣ URV = Upper range value of the flow rate : Formerly full-scale flow rate												
Square-Edge	> 1.5	◉	×	◉	×	○	○	×	×	Process Temp. to 540 °C ; Transmitter Limitted to -30 ~ 120 °C	To 6000 psig	±1-2% URV	R_D>2000
Honed Meter Run	0.5~1.5	◉	×	◉	○	×	○	×	×			±1% URV	R_D>1000
Integral	< 0.5	◉	×	◉	◉	×	○	×	×			±2-5% URV	R_D>100
Quadrant Edge	> 1.5	×	×	◉	◉	○	○	×	×			±2% URV	R_D>200
Eccentric	> 2	○	◉	○	×	◉	○	×	×			±2% URV	R_D>10,000
Segmental	> 4	○	◉	○	×	◉	○	×	×			±2% URV	R_D>10,000
V-CONE	> 0.5~72	◉	◉	◉	◉	◉	○	○	○			±1.5-5% URV	R_D>100
VENTURI	> 2	◉	○	◉	○	○	○	○	○			±1-±2% URV	R_D>75,000
FLOW NOZZLE	> 2	◉	○	◉	○	○	○	×	×			±1-±2% URV	R_D>10,000
LO-LOSS	> 3	◉	×	◉	×	×	◉	×	×			±1.25% URV	R_D>12,500
PITOT	> 3	◉	×	◉	○	×	○	×	×			±5% URV	No Limit
TAPER SEG TUBE	0.5~24	◉	×	◉	◉	◉	○	◉	◉			±2-4% URV	R_D>100

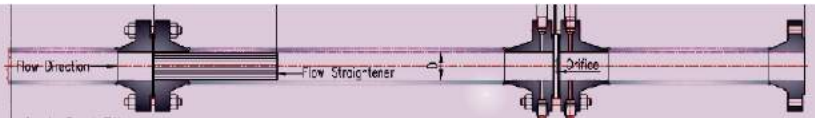

Advantages and Disadvantages of the Sharp Edged Orifice, Flow Nozzle and Venturi Tube

SHARP EDGED ORIFICE	
Advantages	**Disadvantages**
■ Lowest cost ■ Easily installed and/ or replaced ■ High predictability of coefficient of discharge ■ Will not wiredraw or wear in service ■ Sharp edge will not foul up with scale or other suspended mater ■ The adjustable types capable of wide range of metering ■ Used for any fluid, within limits of Reynolds Number given in code	■ Highest non-recoverable head loss ■ Suspended matter may build up at the inlet side of horizontally installed pipe unless eccentric or segmental types of orifices are used with the hole flush with the bottom of the pipe ■ Low capacity ■ Requires pipe line flanges, unless of special construction ■ Pressure connections must be made very carefully
FLOW NOZZLE	
■ Handles 60 percent greater capacity than orifice ■ Can be used where no pipe line flanges exist ■ Cost less than Venturi Tubes and capable of handling same capacities ■ Can be used occasionally in piping layouts not suitable for orifices.	■ Higher cost than orifice ■ Same head loss as orifice for same capacity ■ Inlet pressure connections and throat taps when used must be made very carefully ■ Throat likely to foul up with pipe line scale or other impurities
VENTURI TUBE	
■ Lowest head loss ■ Has integral pressure connections ■ Requires shortest length of straight pipe on inlet side ■ Will not obstruct flow of suspended matter ■ Can be used where no pipe line flanges exist	■ Highest cost ■ Highest installation cost with larger sizes ■ Throat likely to foul up with pipe scale or other impurities ■ Greatest weight and largest size for a given size line

ORIFICE PLATES & FLANGES - 2

IN THIS CHAPTER - 2

Here is introduce the measuring primary devices of fluid flow by means of the differentia pressure and also, the pressure reducing devices intended on pressure drop and steady fluid flow Former called " a MEASURING ORIFICE and Latter called a RESTRICTION ORIFICE".

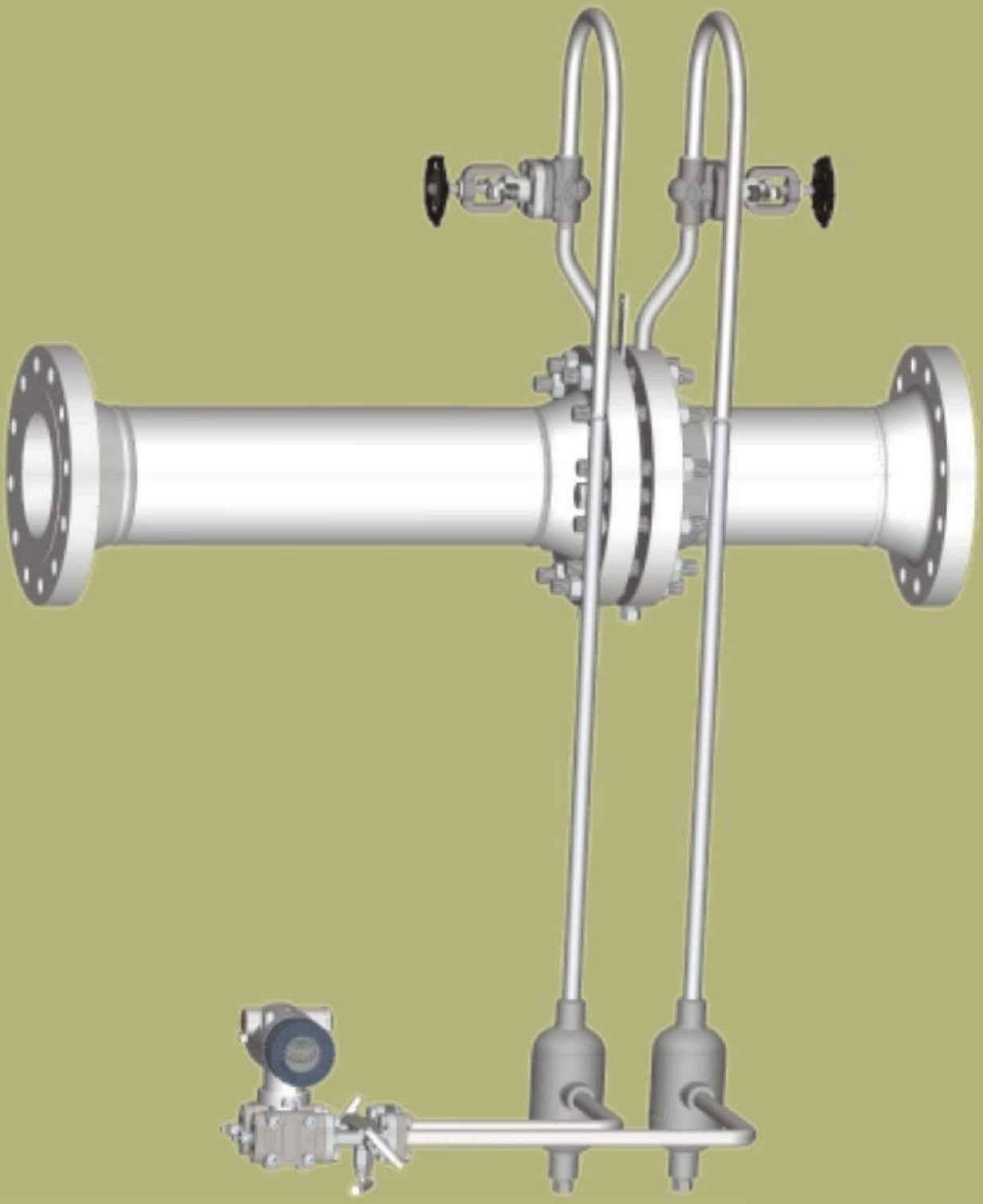

MEASURING ORIFICE PLATES

SAMIL INDUSTRY CO.,LTD.

Although the orifice plates have a disadvantage of permitting a greater pressure loss than other throttle elements like as flow nozzle, venturi tube, etc. The flow measuring using the orifice plates most popularly used because of their simpler shape, easier manufacturability, lower cost and higher reliability.
The bore types of orifice plates include concentric, eccentric, segmental, quarter circle, square bore type and Sizing calculations apply the standard codes which are **ISO-5167, ASME MFC-3M, R.W,MILLER Report, L.K.SPINK & AGA-Report 3, etc.** and Tolerance should be in full compliance with ISO & ASME STANDARDS.

Orifice Bore Types, Calculation Codes of, are available as the following :

- Concentric : ISO-5167, ASME MFC-3M, L.K.SPINK., AGA Report 3.
- Eccentric : L.K.SPINK., R.W. MILLER Report[Specified as General].
- Quarter Circle : L.K.SPINK., R.W. MILLER Report[Specified as General].
- Segmental : L.K.SPINK., R.W. MILLER Report[Specified as General].

For eccentric, quarter circle, segmental, and conical bore types beyond the scope of ISO 5167 : ISO/TR 15377, Technical Report will be used as reference.



1. Concentric Bore Type : Traditional and Universal type with sharp edge, one side of the hole bevelled 45° angle and also have simple structure. This plate can be easily mounted and dismounted. In strict conformance with applicable standards, precisely finished to have requierd shape, size, surface roughness and flatness. pressure tappings for differential pressure measurement are characterized by the arrangement of flange tap, radius tap, pipe tap, vena contracta tap and corner tap.

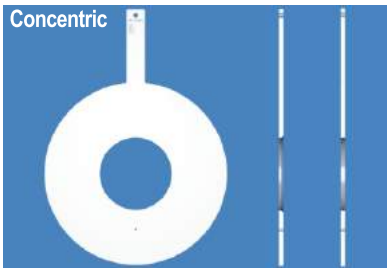

2. Eccentric Bore Type : Location of the bore prevents damming of solid materials or foreign particles and makes it useful for measuring fluids such as sediment, containing solids, oils containing water and wet steam. This orifice plate is used with its eccentric bore bottom flush with the bottom of the piping inside surface in order to avoid the sediment of the fluid. Likewise, for gases or vapors, it may be installed with its eccentric bore top flush with bore top of the piping to avoid to stay of gas or vapor in its vicinity. Eccentric plate can use either flange or vena contracta tap, but the taps must be at 180° or 90° to the eccentric opening. Vena contracta locations are different from those for the concentric plates, and, generally, the possible error can be up to 5 times greater than on concentric plates.

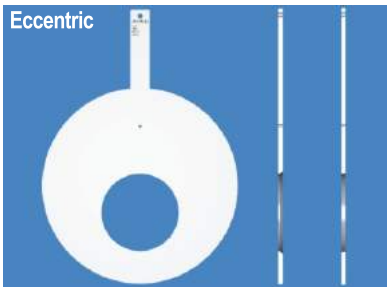

3. Segmental Bore Type : Segmentally bored plates are used for the same type services as the eccentric orifice plate. The segmental opening may be placed either at the top or bottom of the pipe: However, it is generally used in services which require that it be placed at the bottom of the pipe. For the best accuracy, the tap location should be 180° from the center of tangency.

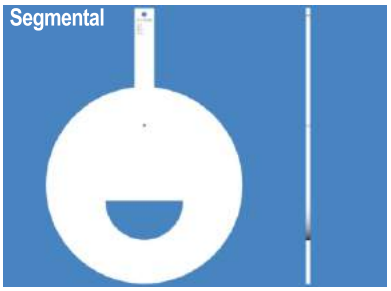

4. Quarter Circle Bore Type : This bore is used specifically designed for viscous flows, such as heavy crude, syrups & slurries, having low Reynolds Numbers[=High Viscosity] and the inlet edge of the bore of this plate is rounded to quarter circle. **$0.245 < \beta < 0.6$**

- up to 1 1/2" : Below Reynolds No. 1000 [depending upon Beta Ratio].
- 2" and Over : Below Reynolds No. 10000 [depending upon Beta Ratio].

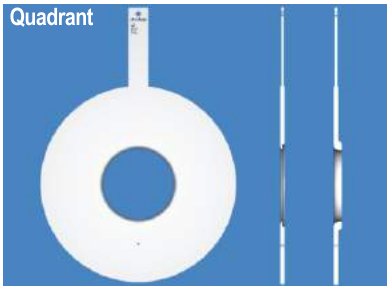

5. Multi Bore Type : This plate is designed/sized based on ISO-5167 and Up/downstream straight length can be significantly reduced by multi holes. (Same as area of one bore) to 3D/2D.





■ Bi-directional Plates : We design and manufacture its plates as per Para.5.1.9 at ISO 5167-2003.

SPECIFICATIONS

Concentric Bore Type :

- Sizing Calculations : ISO 5167-1991 & 2003, ASME MFC-3M, L.K.SPINK., R.W.MILLER, AGA Report 3.
- Pressure Taps : Flange Tap, Radius Tap, Vena Contracta Tap, Corner Tap, Pipe Tap.
- Flange Rating : ANSI & ASME 150# ~ 2500# RF
  600# ~ 2500# RTJ
  JIS 5, 10, 16, 20, 30, 40 & 63 kg/cm^2 and
  Others are available on request.
- Plate Thickness : 3, 6, 9, 12 within of, between e and 0.05D that is specified on the ISO-5167.
- Plate Material : 304SS as minimum [required will be preferred].
- Drain & Vent Holes [Wheep Holes] : 1.6mm up to 4", 2mm from 6" ~ 10", 2.5mm for 12" and 14", 3mm from 16" and Over. For all bore types, ISA RP3.2 Code is available on request only. [Not drilled for orifice bore smaller than 1 inch:25.4mm].

Eccentric Bore Type :

- Sizing Calculations : R.W. MILLER, L.K.SPINK., BS1042.
- Pressure Taps : Flange Tap, Corner Tap, Vena Contracta Tap.
- Flange Rating : ANSI & ASME 150# ~ 2500# RF
  600# ~ 2500# RTJ
  JIS 5, 10, 16, 20, 30, 40 & 63 kg/cm^2 and
  Others are available on request.
- Plate Thickness : 3, 6, 9, 12 within of, between e and 0.05D that is specified on the ISO-5167.
- Plate Material : 304SS as minimum [required will be preferred].
- Vent Holes [Wheep Holes] : 1.6mm up to 4", 2mm from 6" ~ 10", 2.5mm for 12" and 14", 3mm from 16" and Over. [Not drilled for orifice bore smaller than 1 inch:25.4mm].

Segmental Bore Type :

- Sizing Calculations : L.K.SPINK., R.W. MILLER.
- Pressure Taps : Flange Tap, Vena Contracta Tap.
- Flange Rating : ANSI & ASME 150# ~ 2500# RF
  600# ~ 2500# RTJ
  JIS 5, 10, 16, 20, 30, 40 & 63 kg/cm^2 and
  Others are available on request.
- Plate Thickness : 3, 6, 9, 12 within of, between e and 0.05D that is specified on the ISO-5167.
- Plate Material : 304SS as minimum [required will be preferred].
- Vent Holes [Wheep Holes] : 1.6mm up to 4", 2mm from 6" ~ 10", 2.5mm for 12" and 14", 3mm from 16" and Over. [Not drilled for orifice bore smaller than 1 inch:25.4mm].

Quarter Circle Bore Type :

- Sizing Calculations : R.W.MILLER, L.K.SPINK., BS1042.
- Pressure Taps : Flange Tap, Corner Tap.
- Flange Rating : ANSI & ASME 150# ~ 2500# RF
  600# ~ 2500# RTJ
  JIS 5, 10, 16, 20, 30, 40 & 63 kg/cm^2 and
  Others are available on request.
- Plate Thickness : 3, 6, 9, 12 within of, between e and 0.05D that is specified on the ISO-5167.
- Plate Material : 304SS as minimum [required will be preferred].
- Drain & Vent Holes [Wheep Holes] : 1.6mm up to 4", 2mm from 6" ~ 10", 2.5mm for 12" and 14", 3mm from 16" and Over. [Not drilled for orifice bore smaller than 1 inch:25.4mm].

COMMON

MARKING :

- an information of each orifice plate will be engraved in a visible, easily readable permanently as follows :

1. UPSTREAM OR INLET
2. TAG NO.
3. MODEL
4. LINE SIZE
5. BORE SIZE
6. RATING
7. MATERIAL
8. RADIUS OF QUADRANT
[Quuater circle type only]



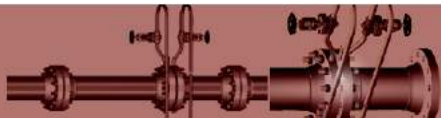

ORIFICE PLATE WITH RING

SAMIL INDUSTRY CO.,LTD.

Orifice ring assemblies are suitable for flow measurement of smaller or medium pipe size at lower pressure. **SOR** assembly is made up of the orifice plate & a pair of orifice ring and gasket.

Differential pressure is taken out in A corner tap.

Orifice blocks, which are of a unit-construction type and provide higher pressure ratings than the SOR assemblies. also tappings are available below.
Differential pressure are taken out in a corner tap and flange tap.
[See model : SOB on next page].

SPECIFICATIONS

- RATING : ANSI 150# ~ 300#
  JIS 5,10,16,20 kg/cm^2
- RING MAT'L : C.S, 304SS, 316SS
- PLATE MAT'L : 316LSS
- PRESSURE TAP : CORNER TAP
- GASKET THICKNESS : 1.5 MM
- TAP NIPPLE : 1/2" SCH 80
  LENGTH : 150 MM
- GASKET MAT'L : NON-ASBESTOS
  TEFLON, etc.

OPTIONS

- TAP VALVE : GATE or NEEDLE VALVE, etc.

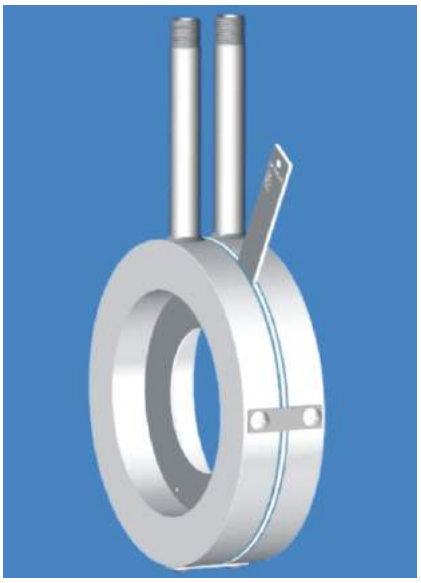

CARRIER RING WITH ANNULAR SLOT

SECTIONAL VIEW

PT & NPT TYPE

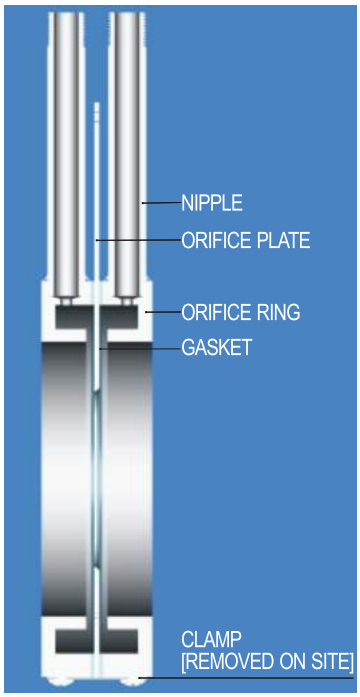

SOR-CORNER TAP

SW & BW TYPE

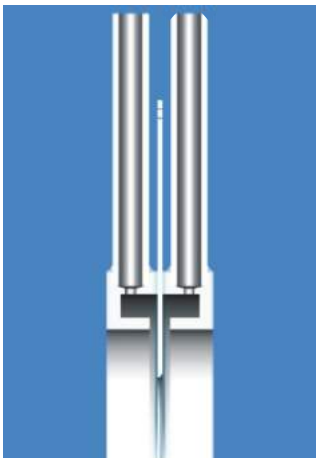

FLANGE TYPE

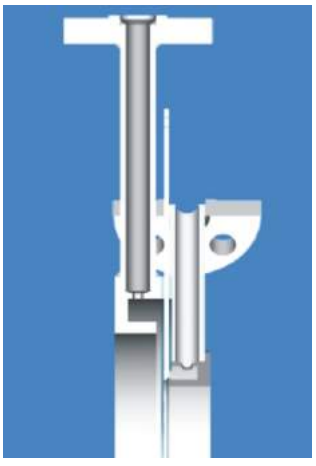

NIPPLE CONNECTION :

1. NIPPLE & ORIFICE RING : Socket Welding as standard.
Screwed also available on request.

2. NIPPLE END : 1/2" NPT or PT as a standard.
: plain end for socket or butt welding.
[But required type will be preferred].





ORIFICE PLATE WITH INTEGRAL BLOCK

SAMIL INDUSTRY CO.,LTD.

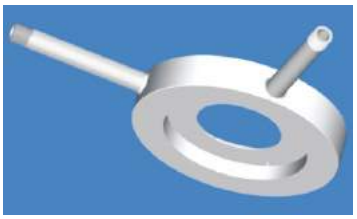

INTEGRAL BLOCK TYPE

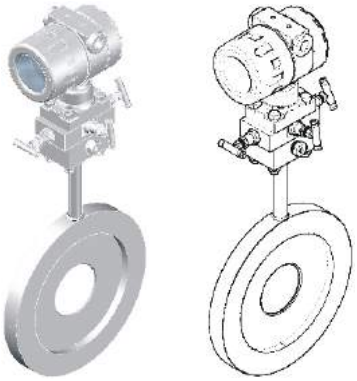

INTEGRAL BLOCK WITH DPT

SPECIFICATIONS

- RATING : ANSI 150# ~ 900#
  JIS 5,10,16,20,30,40 kg/cm^2
- INTEGRAL BLOCK MAT'L :
  304SS, 316SS, MONEL, etc.
- PRESSURE TAP : CORNER TAP
- TAP NIPPLE : 1/2" SCH 80
  LENGTH : 150 MM

OPTIONS

- TAP VALVE : GATE or NEEDLE VALVE, etc.

Orifice plate with integral blocks are suitable for leaky fluids and high pressure. Their tap orientation and tap types are subject to arrangement with the customers. The differential pressure across the orifice plate is proportional to the square of the fluid velocity. The differential pressure at corner tap is applied to the integral single pressure tappings through single holes in the corner formed by the integral block wall and the orifice plate [in this model, not designed the annular chamber type corner tap]. The orifice plate with integral block is cutted and shaped from one block of metal. The pressure tap nipples are welded on the orifice block.



SW & BW TYPE



FLANGE TYPE

NIPPLE CONNECTION

NIPPLE & INTEGRAL BLOCK :
Socket Welding as a standard.
Screwed also available on request.

NIPPLE END :
1/2" NPT or PT as a standard.
[But customer spec. To preferred].

SECTIONAL VIEW

PT & NPT TYPE

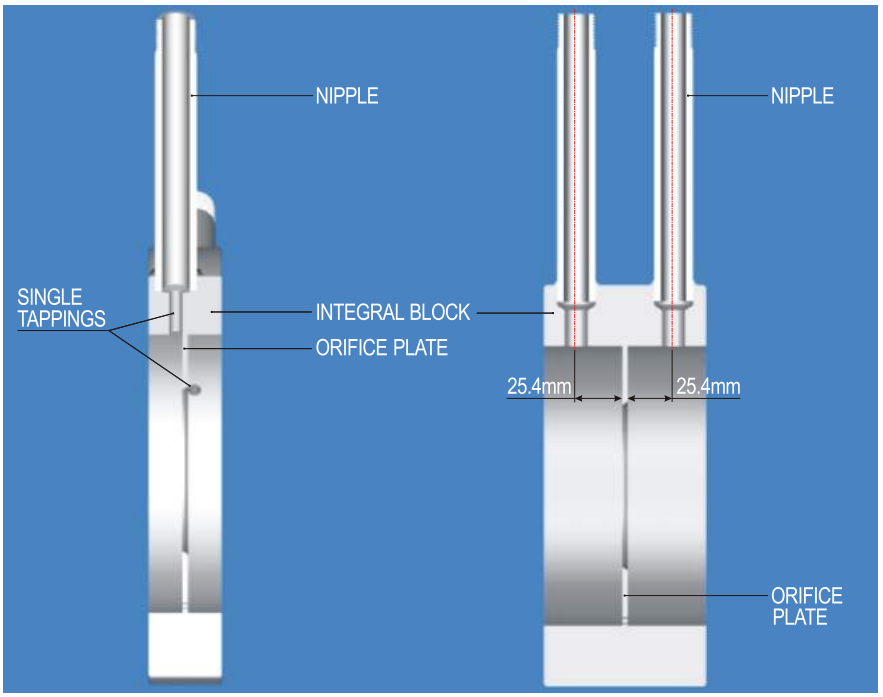

SOB-CORNER TAP SOB-FLANGE TAP

ORIFICE PLATE WITH RING JOINT

SAMIL INDUSTRY CO.,LTD.

The holding ring assembly is a combination of a holding ring and orifice plate designed for Ring Type Joint[RTJ] Flanges of ANSI, JPI or MSS SP 44 [ASME A16.47] Standards. The holding ring has a function of holding the orifice and also a function as a gasket to prevent leakage of the process fluid. This metallic sealing system is applicable to a fluid of high pressure and high temperature. The pressure tapping employ normally flange tapping. Orifice plates easily can remove and interchangeable from holding ring.



OCTAGONAL RING GASKET

SPECIFICATIONS

- RATING : ANSI 600# ~ 2500#
  MSS SP 44 [ASME 16.47A]
- RING GASKET MAT'L : C.S, 304SS,
- 316, SOFT STEEL, etc.
- PLATE MAT'L : 316LSS
- PRESSURE TAP : FLANGE TAP.
- GASKET THICKNESS : 1.5 MM
- GASKET TYPE : OCTAGONAL & OVAL FORMED.

OPTIONS

- TAP VALVE : GATE or NEEDLE V/V.



OVAL RING GASKET

SECTIONAL VIEW

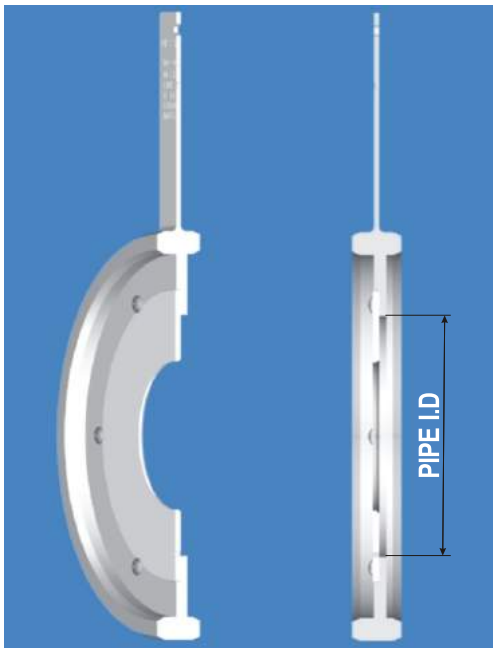

LINE SIZE : 3" ~ 24"

The screw for fixing the holding ring and the orifice plate are use two types according to line size as below sectional view.



LINE SIZE : 1/2" ~ 2 1/2"

Orifice flange assemblies are widely used in conjunction with orifice meters for measuring the rate of flow of liquids and gases. Orifice flange assemblies are comprised of flange, stud bolts, nuts, plug, gasket, jack bolts, orifice plate. And they have tapping holes for differential pressure.

SAM IL is apply the flange assemblies as ANSI, JPI, KS, MSS SP 44, API Standards, etc. And tapping holes per flange have two taps with 180° apart from each other.
Therefore, you can change tapping angle by turning the flange along with the bolt holes.



SOP-SOF

SPECIFICATIONS

- Orifice Flange Types : Welding Neck [Raised Face]
  Welding Neck[Ring-Type Joint]
  Slip-On[RF], Sock-Welding[RF]
  Turn to sectional view on next page for flange types.
- Code : ANSI, JPI, API, KS, JIS, MSS SP 44, AWWA.
- Flange Rating : ANSI[or JPI] 150, 300, 600, 900, 1500, 2500LB.
  KS[or JIS] 10, 16,20, 30, 40, 63K
- Flange Mat'l : Carbon Steel, 304SS, 316SS, etc.
- Gasket Thickness : Sheet type - 1.5mm.
  Spiral Wound Type - 4.5 mm.
- Tapping Nos. : 2 tapping equipped with a plug per Flange.
- Tapping Orientation : 180° apart.
- Bolts Material : A193 Gr.B7, B8, B8M, etc.
- Nuts Material : A194 Gr.2H, 8, 8M, etc.
- Jack Bolts Material : 304SS.

EXPLODED VIEW

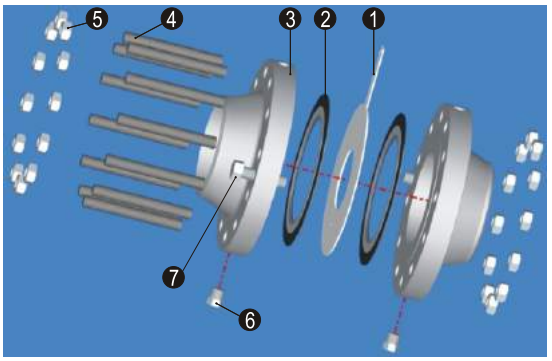

NO.	PARTS	Q'TY
1	Orifice Plate	1
2	Spiral Wound Gasket	2
3	Orifice Flange	2
4	Stud Bolts	n
5	Nuts	2n
6	Plug	2
7	Jack Bolts	2



MULTI BORE ORIFICE PLATE

SAMIL INDUSTRY CO.,LTD.

Orifice has extensively been used for flow measurement device, due to cost, simplicity and the accuracy. Typical standard orifice require certain long straight length between orifice and major flow disturbances, which might not come in handy in some plant area. A product called multi bored orifice by **SAMIL** offers a shorter straight pipe length requirement thus reducing the material cost. Both orifices were successfully applied in water flow measurement during flow testing at the laboratory with less than 5% deviation on multi bored orifice compare to standard orifice.

THE ADVANTAGESOF MULTI BORED ORIFICE

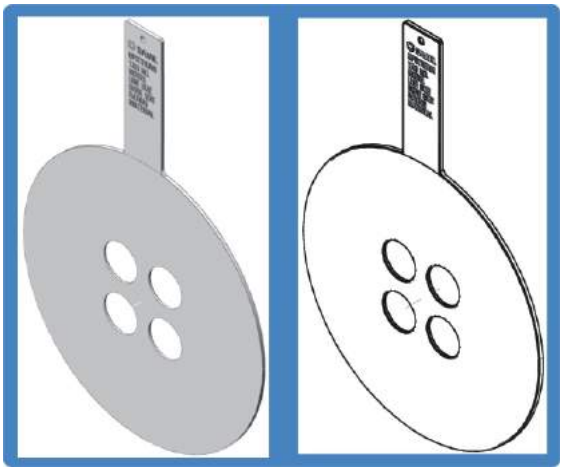

The multi bored orifice plate is a revolutionary innovative technology based on the most common differential primary element in the industry. While not complying with standards of AGA Report Number 3, ASME MFC-3M or ISO 5167, it is designed based on those standards and provides superior performance in short straight pipe run, tight fit applications with upstream flow disturbacnes.

1. Require 3 diameters upstream of a flow disturbance and 2 diameters downstream.
- Shorter pipe straight length requirement resulting in lower material cost.
- Provides flexibility of flowmeter placement and design.

2. Integrated design reduces installation costs as compared to standard orifice plates.
3. Highly accurate and repeatable primary elements.
4. Suitable for most gas, liquid and steam applications.

COMPARISON MULTI BORED ORIFICE AND STANDARD ORIFICE

Below table describe a comparison between multi bored orifice plate technology and standard orifice plate technology, highlighting the deviations from the standards. These deviations allow for more flexible installation as straight pipe requirements are reduced in some cases by as much as 92%.

Category	Multi bored orifice plate(Model : SMP)			
Total straight pipe run requirements Upstream : Downstream :	SMP 3 2	ASME MFC-3M Up to 44 7	AGA Report No. 3 Up to 44 4.5	ISO 5167 Up to 44 7
Flow conditioners	Not Required for SMP. All three standards sometimes require flow conditioners to shorten required straight pipe run.			
Pressure Taps Flange Corner Radius (D and 1/2D)	 Complies with all three standards Complies with ASME and ISO. Corner taps not included AGA Report No. 3.			

Orifice plate thickness 2" to 4" 6" to 8" 10" to 24"	Complies with all three standards Compliant to ASME MFC-3M & ISO 5167. Thicker than AGA Report No. 3.
Beta(β) Ratio	Area of 4 holes = Area of same β for standard orifice of all three standards. Size of one of the 4 holes : 0.5 x standard orifice bore. Available β -ratio of the multi bore orifice: less than 0.65.
All other plate dimensions angle of bevel, bore thickness(e)	Complies with all three standards.
Surface finish	Complies with all three standards.
discharge coefficient uncertainty flow rate equation, discharge coefficient equation	Follows ISO 5167.
Gas expansion factor	Follows ISO 5167.

SPECIFICATIONS



1. β-ratio range : 0.2 to 0.65
2. Discharge coefficient uncertainty : 0.50 % to 0.75%
For 0.65 beta and ReD < 10,000 : Add additional 0.5%
3. Plate Material : 316L SS as minimum
4. Standard pipe sizes : 2"(50) to 24"(600) mm
for other pipe size, contact **SAMIL**
5. Operating limits : Temperature, -196 to 640 degC
Differential Pressure : 20000 mmH2O
for -196 ˚C ~ 425 ˚C
: 10000 mmH2O
for 425 ˚C ~ 640 ˚C
Maximum working pressure, per ASME B16.5
6. Orifice bore sizes : Beta(β) is calculated by 2 x d / pipe size.
7. Beta (β) available : Various depends on pipe schedule(pipe I.D)
Due to the pipe I.D, Beta ratio may be impossible to 0.65 because four(4) holes are not distributed into pipe I.D.
8. Calculation code : ISO 5167, ASME MFC-3M, AGA Report No. 3.
9. Taps available : Flange, Corner and Radius taps.
10. Tapping orientaiotn : Pressure taps centered between any 2 (of 4) orifice bore.
11. Centering : The SMP should be installed so that it is centered In the pipes as recommended by ISO-5167.
12. Assembly type : Multi bore orifice plate with flange assembly.
: Multi bore orifice plate with flange and DPT assembly. (Integral type).





MULTI BORE ORIFICE STRAIGHT LENGTH

SAMIL INDUSTRY CO.,LTD.

STRAIGHT PIPE RUN

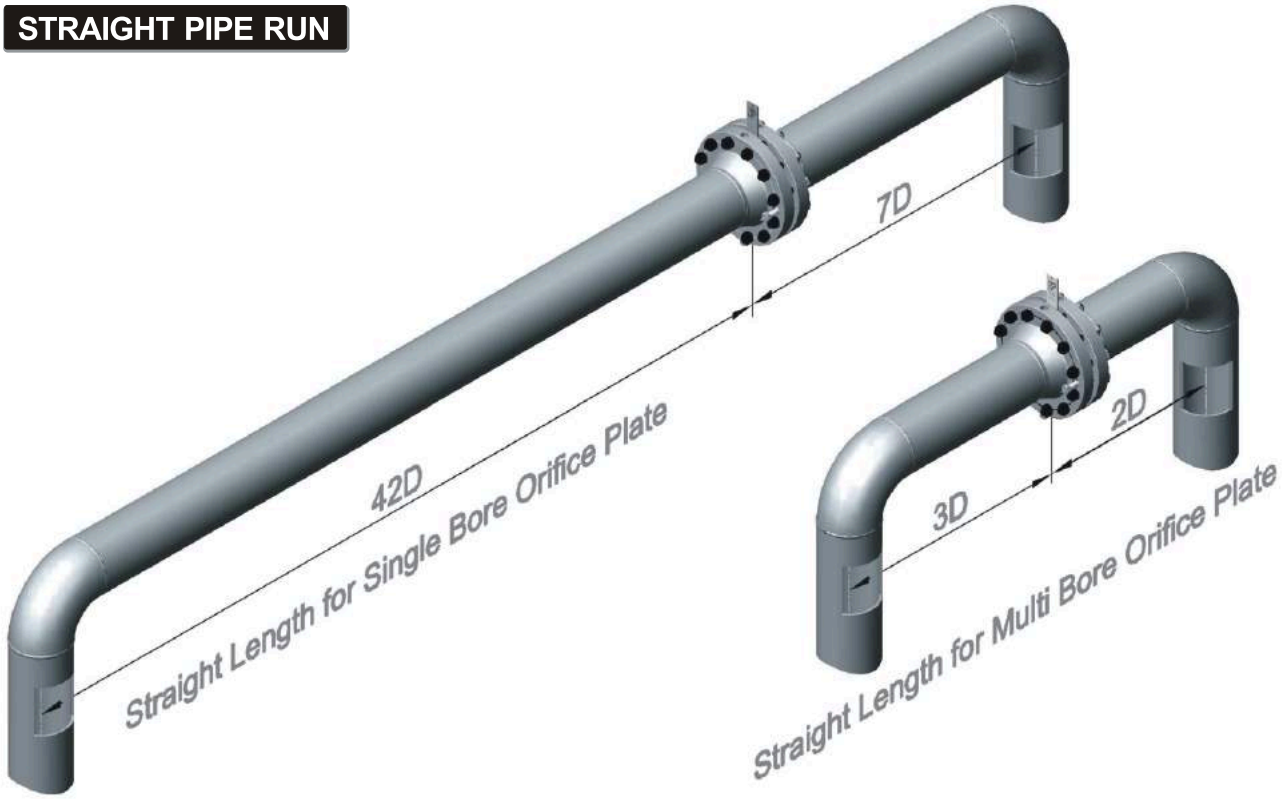

MINIMUM STRAIGHT PIPE REQUIREMENT

Used the appropriate lengths of straight pipe upstream and downstream of the **SMP** to minimize the effects of moderate flow disturbances in the pipe.
Table below lists recommended lengths of minimum straight pipe.

Beta Ratio	**0.2 ~ 0.65**
Single 90° bend or tee	**3 x Pipe I.D**
Two or more 90° bends in the same plane	**3 x Pipe I.D**
Two or more 90° bends in different plane	**3 x Pipe I.D**
Concentric reducer (2D to D)	**3 x Pipe I.D**
Butterfly valve (75% open)	**3 x Pipe I.D**
Downstream	**2 x Pipe I.D**

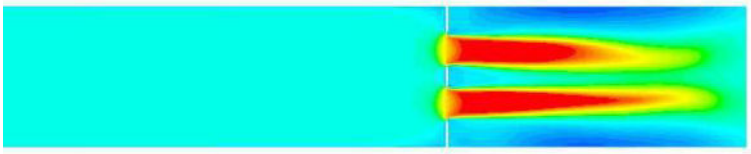

Velocity contour at four(4) holes

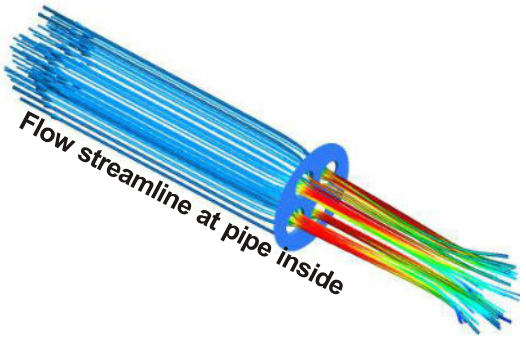



Total pressure contour at four(4) holes

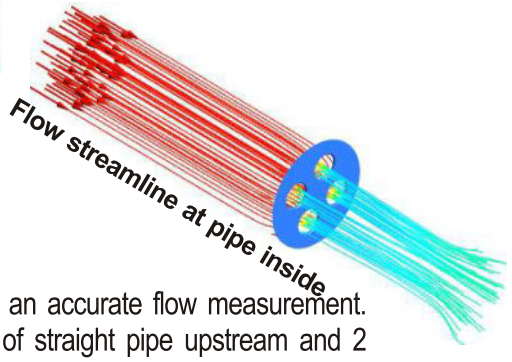

Standard orifice plates require significant straight length to assure an accurate flow measurement. The multi bored orifice plate, however only requires 3 diameters of straight pipe upstream and 2 diameters downstream. In some cases, this can equate to a 92 percent reduction in piping.
Additionally, the reduction in straight pipe allows more flexibility in determining flowmeter placement. Also, the downstream distance from upstream face of the multi bored orifice for pressure recovery Is very short than the standard orifice plate.

The multi bored orifice plate(SMP) follows the discharge coefficient of the ISO 5167-2 : 2003.



SAMIL INDUSTRY CO.,LTD.

Welding Neck Flanges :

The Welding Neck Flange is normally referred to as the “high hub” flange. It is designed to transfer stresses to the pipe, thereby reducing high stress concentrations at the base of the flange. The welding neck flange is the best designed butt-welded flange of those currently available because of its inherent structural value. It is expensive because of the design.

Slip-On Flanges :

The Slip-On Flange has a low hub because the pipe slips into the flange prior to welding. It is welded both inside and out to provide sufficient strength and prevent leakage. Slip-On Flanges are all bored slightly larger than the O.D of the matching pipe. They are preferred over welding neck flanges by many users due to their lower initial cost, but final installation cost is probably not much less than that of the welding neck flange because of the additional welding involved.

Socket Welding Flanges :

The Socket Welding Flange is similar to a Slip-On flange except it has a bore and a counter-bore dimension. The counter-bore is slightly larger than the O.D of the matching pipe. Allowing the pipe to be inserted into the flange similar to a Slip-On flange. The diameter of the smaller bore is the same as the I.D of the matching pipe. A restriction is built into the bottom of the bore which sets as a shoulder for the pipe to rest on. This eliminates any restriction in flow when using a socket welding flange.

Excerpts from ANSI B16.5 & B16.36 forged flanges.

SECTIONAL VIEW

Flow Direction

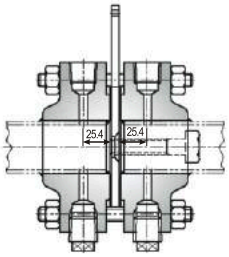

SO-RF

Flow Direction

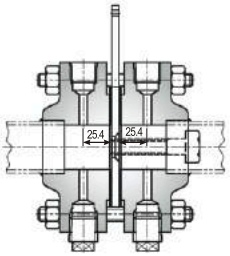

SW-RF

Flow Direction

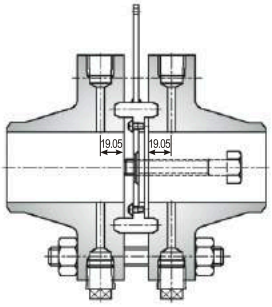

WN-RTJ

Flow Direction

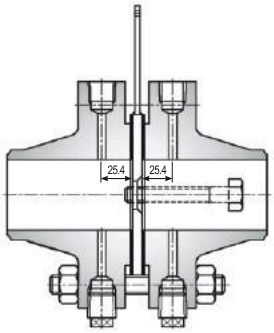

WN-RF

ISO- 5167 CODE

For each orifice plate, at least one upstream pressure tapping and one downstream tapping shall be installed in one or other of the standard locations, i.e. as flange, D and 1/2D [Radius] or corner tappings.

A single orifice plate may be used with several sets of pressure tappings suitable for different types of standard orifice meters, but to mutual interference, several tappings on the same side of the orifice plate shall be offset by at least 30°

Flange Tappings : for orifice plates with flange tappings, the spacing $\mathbf{a}_u$ of the upstream pressure tapping is nominally 25.4mm and is measured from the upstream face of the orifice plate. The spacing $\mathbf{a}_d$ of the downstream pressure tapping is nominally 25.4mm and is measured from the downstream face of the orifice plate.

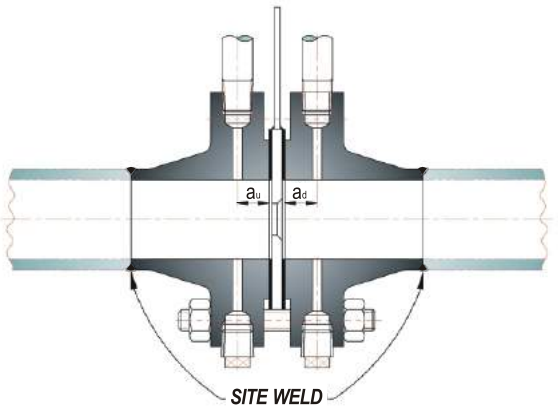

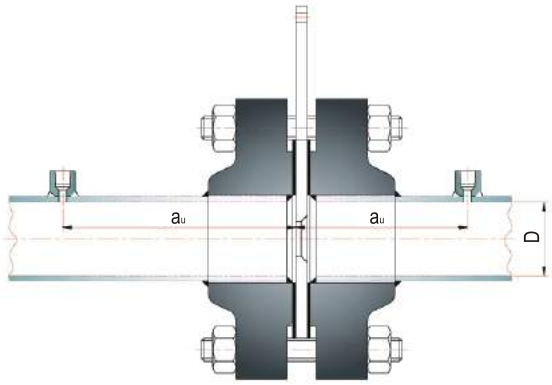

Radius Tappings : for orifice plates with D and D/2 tappings[also called "Radius Tap"], the spacing $\mathbf{a}_u$ of the upstream pressure tapping is nominally equal to D. The spacing $\mathbf{a}_d$ of the downstream pressure is nominally equal to D/2. both $\mathbf{a}_u$ and $\mathbf{a}_d$ spacing are measured from the upstream face of the orifice plate. This tapping is a modification of, and has largely replaced, the Vena Contracta taps. It yields equally accurate results and has the advantage that the downstream connection is easier to locate.

Corner Tappings : for orifice plates with corner tappings on lines smaller than 2 inch, the pressure tappings may be either single tapping or annular slots. Former may be located in the flanges [figure on the right] and latter may be located in the carrier rings [see model : **SOR**].

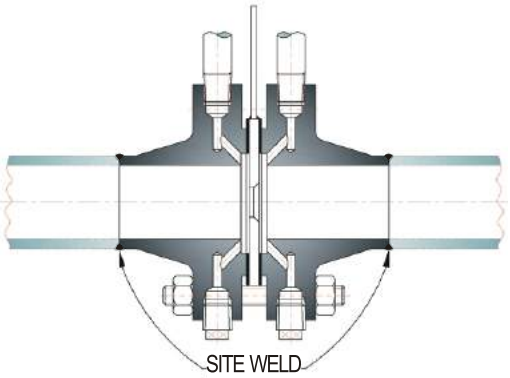

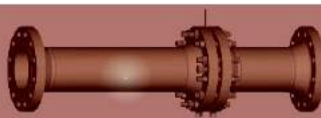

ASME RESEARCH & R.W.MILLER REPORT

As the following tappings are not applicable to the ISO-5167 CODE, it applies ASME research report on fluid meters for Vena contracta Tapping and applies R.W.MILLER Report for Pipe Tapping.

Pipe Tappings : for orifice plate with 2 1/2D & 8D Tappings, the spacing $\mathbf{a}_u$ of the upstream pressure tapping is nominally equal to 2 1/2D and is measured from the upstream face of the orifice plate. The spacing $\mathbf{a}_d$ of the downstream pressure is nominally equal to 8D and is measured from the downstream face of the orifice plate.

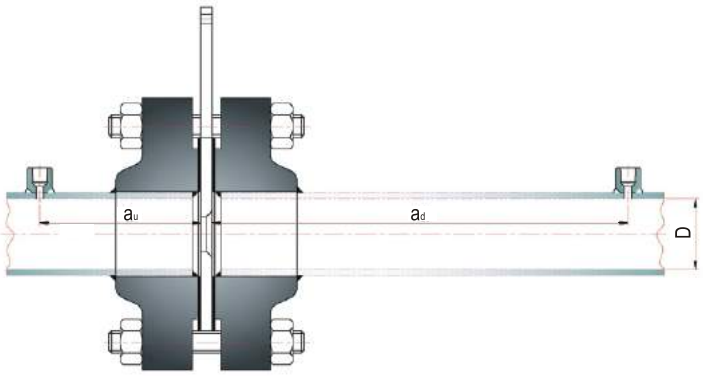

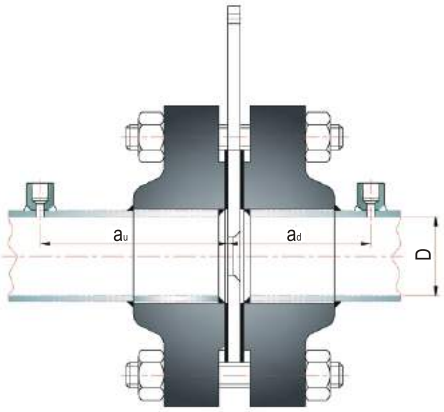

Vena Contracta Tappings : the center of the inlet tap [$\mathbf{a}_u$ distance] is 1D preceding the upstream face of the orifice plate. The distance [$\mathbf{a}_d$] of the outlet pressure tap from the upstream face of the orifice plate depends upon the diameter ratio, β, of the orifice to be used as shown by the red colored line of below graph. Location and tolerance are function of β-ratio These distances are subject to a tolerance varying linearly from ±0.2D at β=0.20 to ±0.05D at β=0.75.

Mean a_d Value : 0.37D ~ 1.03D

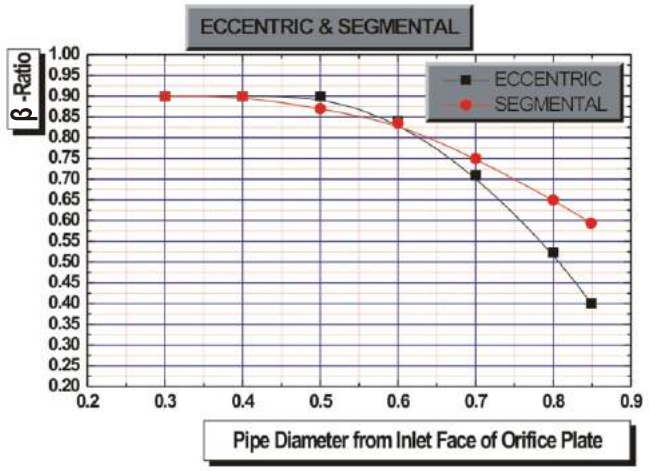

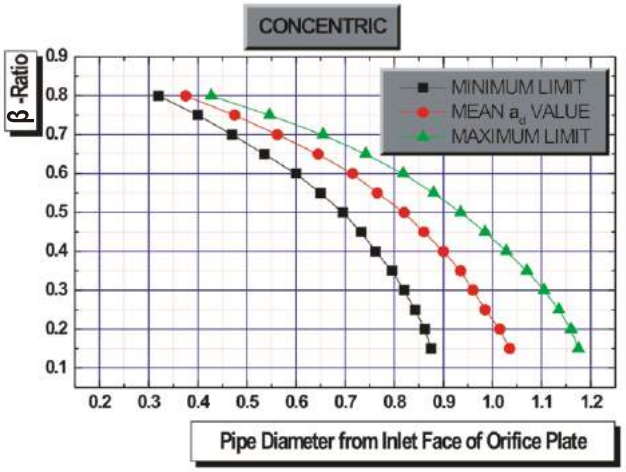

Easy installation as well as simple maintenance, suitable for measuring fluid of small bore based on its high accuracy, used in combination with differential pressure transmitter.



SPECIFICATIONS

- Measuring Medias : Liquid, Gas or Vapor Flow
- Operating Temp. : -40 to 390°F[-40 to 200°C]
- Pressure Rating : Up to 600# [40 kg/cm^2-g]
- Body Material : A351CF8M
- Plate Material : 316LSS
- Line Size : 1/2" ~ 1" [3/4" : Standard].
- End Connection : Same as main piping spool.
- Accuracy : +/- 0.5% (calibrated).

CONVENTIONAL INSTALLATION

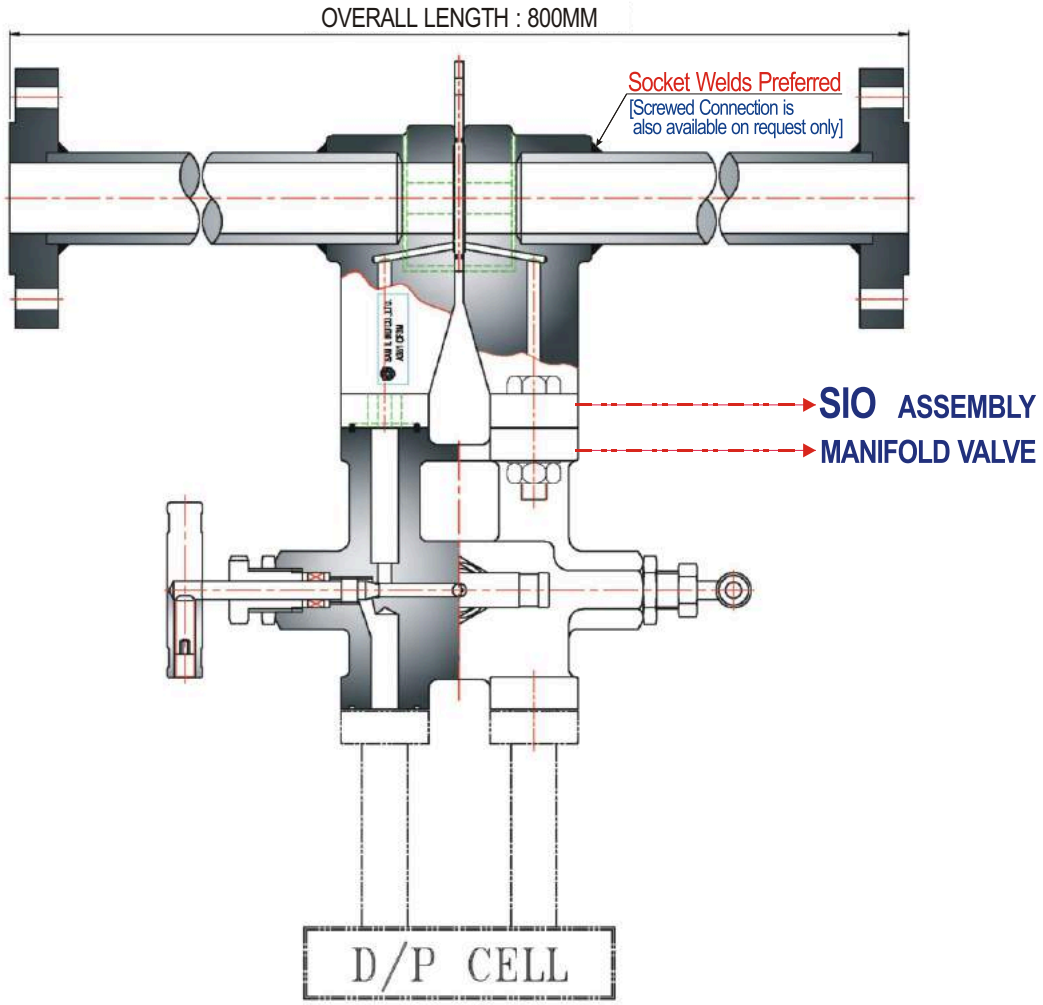



ORIFICE METER RUN ASSEMBLY

SAMIL INDUSTRY CO.,LTD.

Orifice meter runs are used for measuring the flow in order to get higher accuracy. The orifice meter runs are therefore, not the ones simply weld pipes to upstream and downstream sides of a orifice assembly, but ones welding smaller inside diameter pipes to smaller diameter of flanges, and then finish inside diameter of the pipe and flange assembly by boring or honing to the specified dimensions and within the required tolerance and surface roughness.

SMR WITH END FLANGES

SMR WITH BUTT-WELDS END

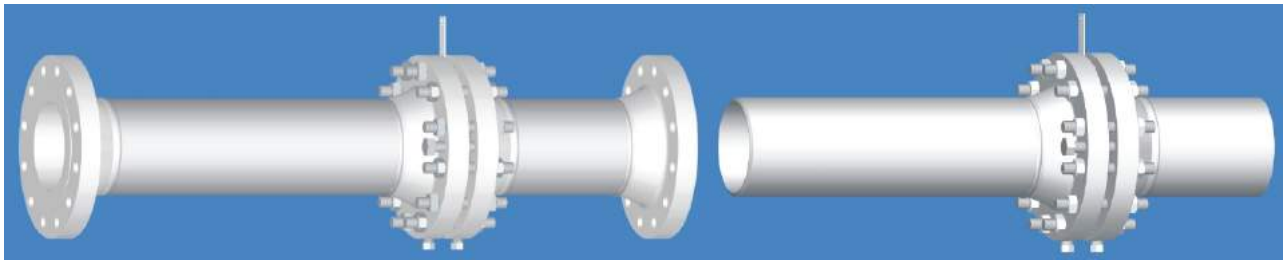

SPECIFICATIONS

- Line size : 1/2" to 1 1/2" as standard size by ASME MFC-14M.
  [Other sizes are available on request by ISO 5167]
- Materials : as per customer's material purchasing specification(MPS).
- Rating : 150# ~ 2500#.
- Boring or Horning finish : available or request only by customer for more accurate measurement.
- Upstream length supplied : 4 x pipe inside diameter[=4D], as standard.
  Also available as per that of the ISO 5167 or ASME on request.
- Downstream length supplied : 2 x pipe inside diameter[=2D], as standard.
  Also available as per that of the ISO 5167 or ASME on request.





A flow straightener a device which removes or significantly reduces swirl[similar to turbulent flow] and this should be installed to the upstream of the orifice plate for accurate measurement of flow rate. Wherever a straight pipe of sufficient length can not be installed, install a flow straightener.

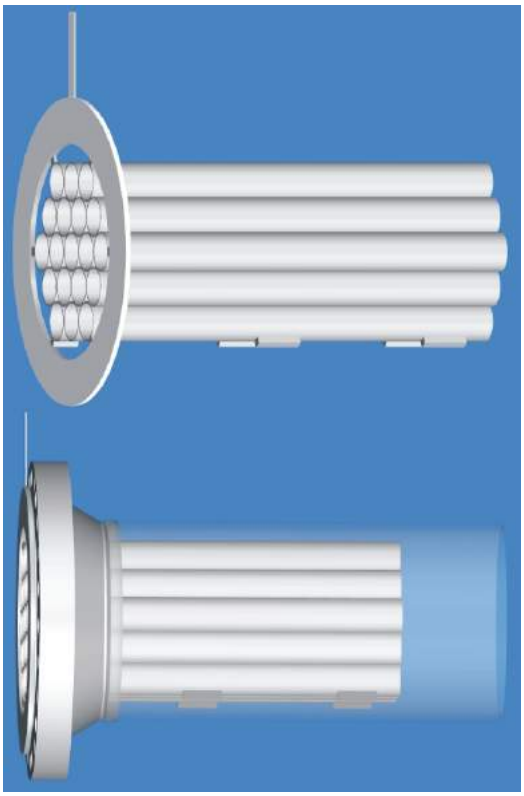

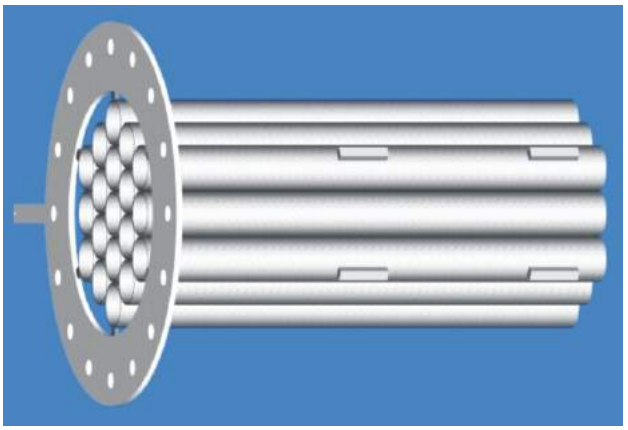

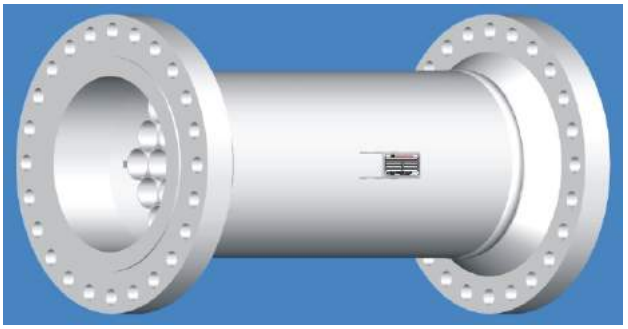

▣ Other types are available on request in full compliance with ISO-5167 STANDARD.

RECOMMENDED DIMENSIONS OF AN INSTALLATION

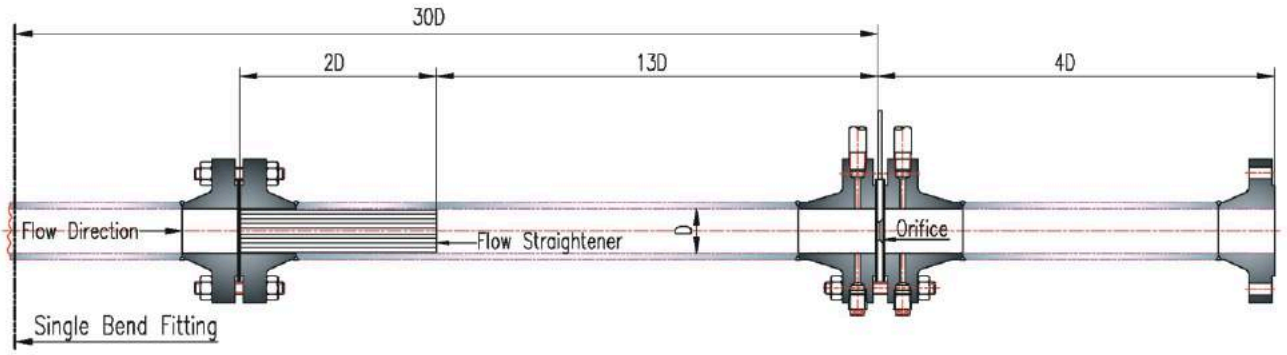

SOP

Restriction orifices are used for reducing fluid pressure and are designed somewhat different from the measuring orifice plate. This plate have the same shape with measuring concentric bore type orifice plate except for that is not beveled.

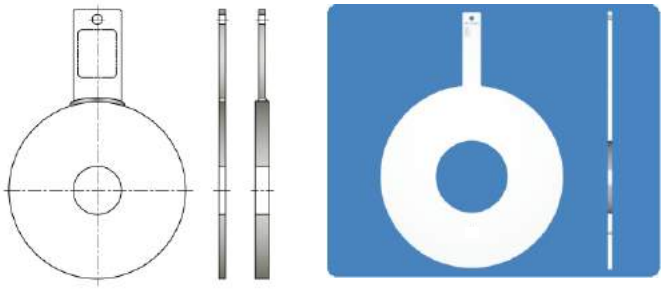

MULTI TYPE-SOM

This type is used for reducing cavitation for liquid and sonic for gaseous to generate noise or vibration, and accelerate the erosion of the piping.

Right-Hand side Fig. Illustrates flow through a single restriction orifice in a pipe :
Pu is the pressure upstream of the orifice, Pc is the Vena-Contracta Pressure, Pd is the pressure downstream of the orifice. The last pressure Pd must be higher than the vapor pressure, Pv, of the flowing fluid. If Pc falls below Pv, Bubbles form, the first stage of cavitation. As the fluid moves downstream, the bubbles collapse under the higher pressure, Pd, in the final stage of Cavitation.

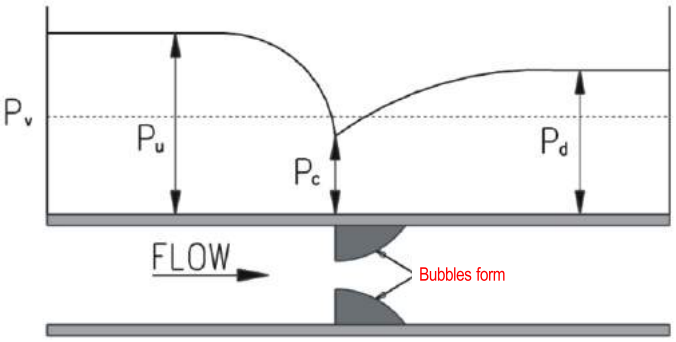

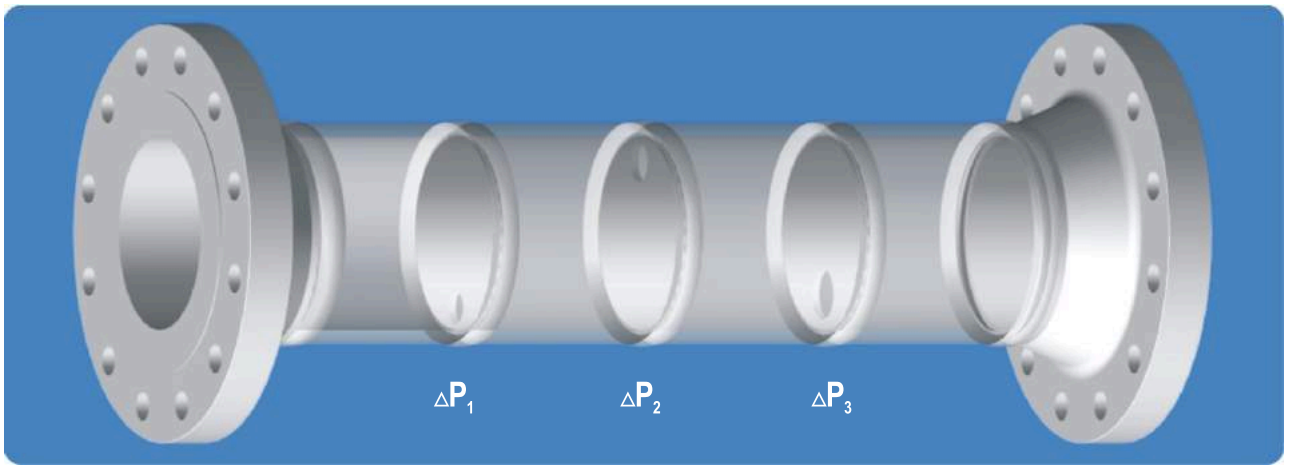

MODEL : SMO-S

Multi-Stage Orifice [Fitted-In Pipe Type]

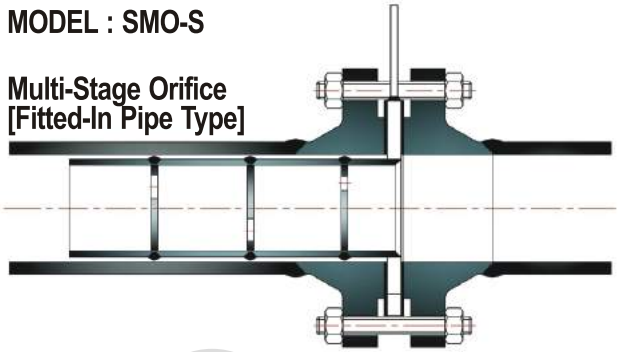

MODEL : SMO-H

Single Plate with Multi-Holes.

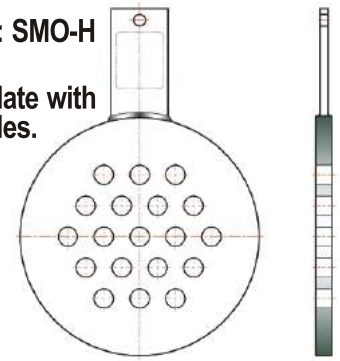





SUR

This model, **SUR** is suitable for size below 1 1/2" and inclusive. Connection is socket welding as **SAMIL** standard and screwed type also available on request.



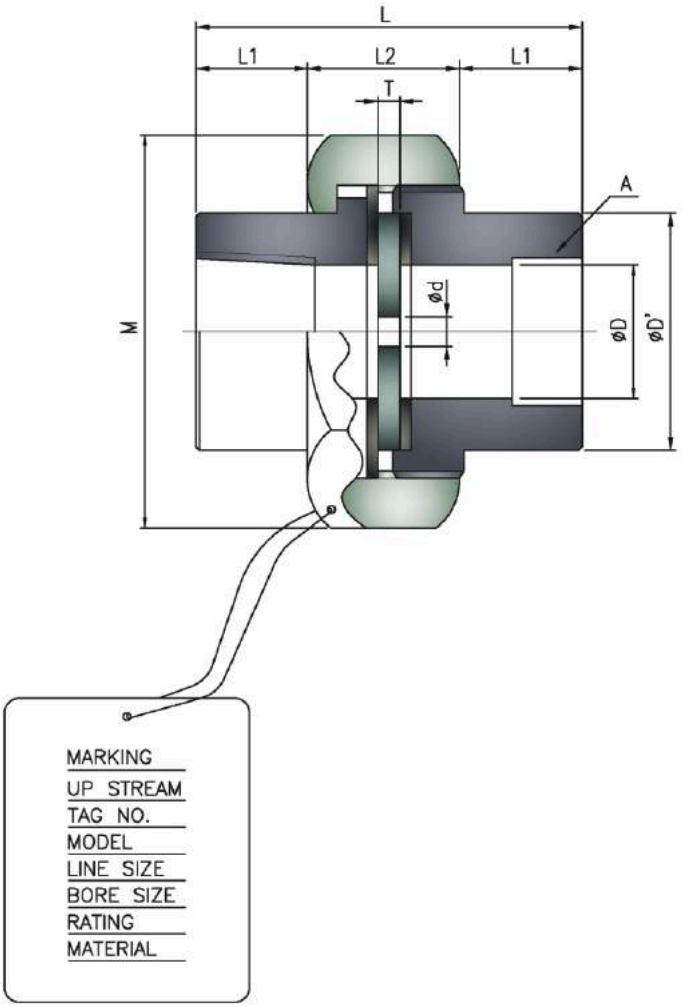

*[D]: as per line schedule

SUR DIMENSION TABLE

3000LB									6000LB								
SIZE	M	L	L1	L2	T	A	D	D'	SIZE	M	L	L1	L2	T	A	D	D'
1/4"	35 HEX	42	10	22	3	1/4" SW or NPT	*	22	1/2"	56 HEX	60	17	26	3	1/2" SW	*	40
3/8"	41 HEX	42	10	22	3	3/8" SW or NPT	*	27	3/4"	65 HEX	67	19.5	28	3	3/4" SW	*	44.5
1/2"	46 HEX	48	12	24	3	1/2" SW or NPT	*	32	1"	74 OCT	75	22.5	30	3	1" SW	*	51
3/4"	54 HEX	54	12	30	3	3/4" SW or NPT	*	38	1 1/2"	103 OCT	91	26	39	3	1 1/2" SW	*	71.5
1"	63 HEX	60	15	30	3	1" SW or NPT	*	47	2"	124 OCT	113	34	45	3	2" SW	*	90
1 1/2"	80 OCT	76	18	40	3	1 1/2" SW or NPT	*	63	2 1/2"	150 OCT	118	35	48	3	2 1/2" SW	*	105

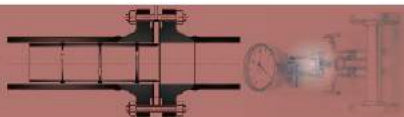

SAMIL INDUSTRY CO.,LTD.

SINCE 1979
SAMIL INDUSTRY CO.,LTD.

ORIFICE PLATES & FLANGES

NO.	BY	DATE	REVISION
1			
2			
3			
4			

SHEET	OF
CONTRACT	DATE
REQ. P.O	
BY / CHK'D / APPR.	

ORIFICE PLATES

1. CONCENTRIC ■ OTHER :
2. ISA STANDARD ☐ OTHER : ISO-5167
3. BORE : MAX. RATE ■ NEAREST 1/8" ☐
4. MATERIAL : 304SS ☐ 316LSS ■ OTHER :
5. RING MATERIAL & TYPE :
6. MODEL NO. & MFR. : SEE BELOW NO. 42 & 43

ORIFICE FLANGES

7. TAPS : FLANGE■ RADUUS☐ CORNER☐ PIPE☐ VENA☐
8. TAP SIZE : 1/2" NPT ■ OTHER :
9. TYPE : WELD NECK ■ SLIP ON ☐ THERADED ☐
10. MATERIAL : STEEL ■ OTHER :
11. FLANGE INCLUDED ■ OTHER :
12. FLANGE RATING : ANSI 300# RF OTHER :

FLUID DATA	★	13	Tag No.				
		14	Service				
		15	Line No.				
	★	16	Fluid Name				
	★	17	Fluid State				
	★	18	Maximum Flow [m^3/hr]				
	★	19	Normar Flow [m^3/hr				
	★	20	Press. @ Max. / Nor. [Kg/cm^2 g]				
	★	21	Temp. @ Max. / Nor. [°C]				
	★	22	Sp. Gr. / Density at Base				
	★	23	Sp. Gr. / Density at Oper.				
	★	24	Super Comp. Factor [zf]				
	★	25	Mol. W.T. Cp / Cv				
	★	26	Operating Viscosity [cp]				
		27	Base Press. Base Temp.				
METER	★	28	Type of Meter				
	★	29	Diff. Range [mmH2O]				
		30	Static Press. Range				
	★	31	Full Scale Range [m^3/hr]				
		32	Chart Multiplier				
PLATE & FLANGE	★	33	Flange Rating				
	★	34	Line Size Sch.				
	★	35	Line Material				
	★	36	Tap Type / No. per Flange				
	★	37	Flange Type				
ACCESSORY		38	Nipple				
		39	Block Valve				
		40	Gasket [Material]				
		41	Bolt / Nut [Material				
MANU'ER DATA		42	Model				
		43	Manufacture	SAMIL	SAMIL	SAMIL	SAMIL
	★	44	Q'ty				

REMARK : "★" MARKED COLUMNS SHALL BE FILLED UP BY CUSTOMER, IF POSSIBLE.
NOTE :

http : // www.samilind.co.kr

FLOW NOZZLES - 3

IN THIS CHAPTER - 3

Here is introduce the measuring primary devices of fluid flow by means of the differential pressure that is flow nozzles to use at high pressure and temperature than the orifice plate. and the VENTURI-NOZZLE also is include herein.

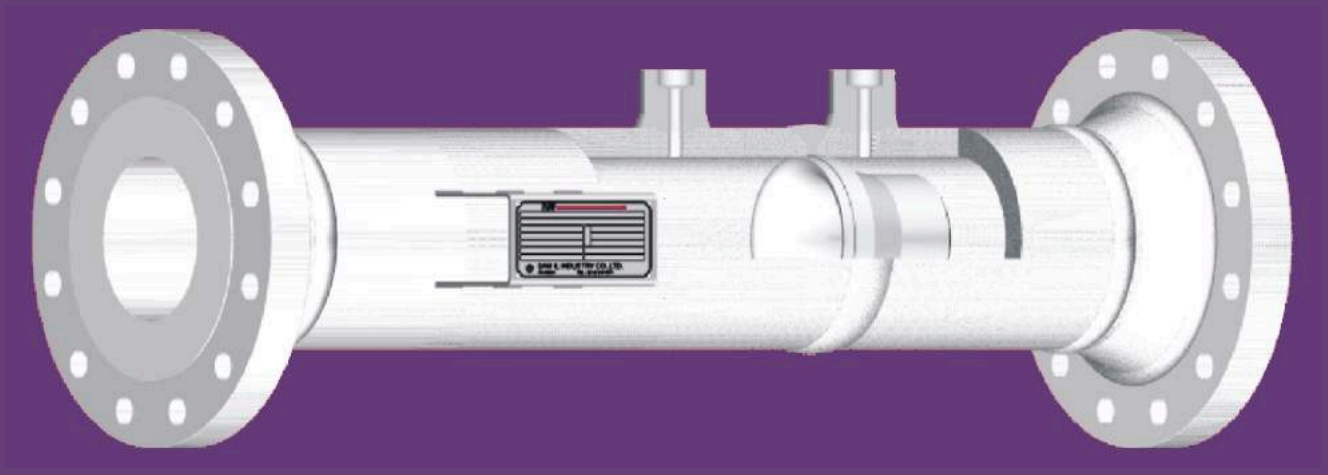

SAMIL INDUSTRY CO.,LTD.

GENERAL DESCRIPTION

This is suitable for determining the flow rate of fluid flowing at high pressure and high temperature and is permit approximately 60% greater capacity than the orifice plate.

The principle of the method of measurement is based on the installation of a nozzle in to a pipeline in which a fluid is running full. The installation of the primary device causes a static pressure difference between the upstream side and the throat. The flow rate can be determined from the measured value of this pressure difference.

The flow nozzles, more costly than other orifice due to their construction, are suited for determining the flow rates of fluids flowing at high temperature and high pressure. Under the same measuring conditions, a flow nozzle has a higher mechanical strength, can permit the flow of more than 60 percent greater volume of a fluid, and can measure the flow rates of fluid containing solid particles less disturbed, than an orifice having the same bore. Thus, they are suited, in addition, for high-speed flowing fluids. We can offer only nozzles as well as flow nozzle assemblies having welded short pipe on both their upstream[4D] and downstream[2D] sides.

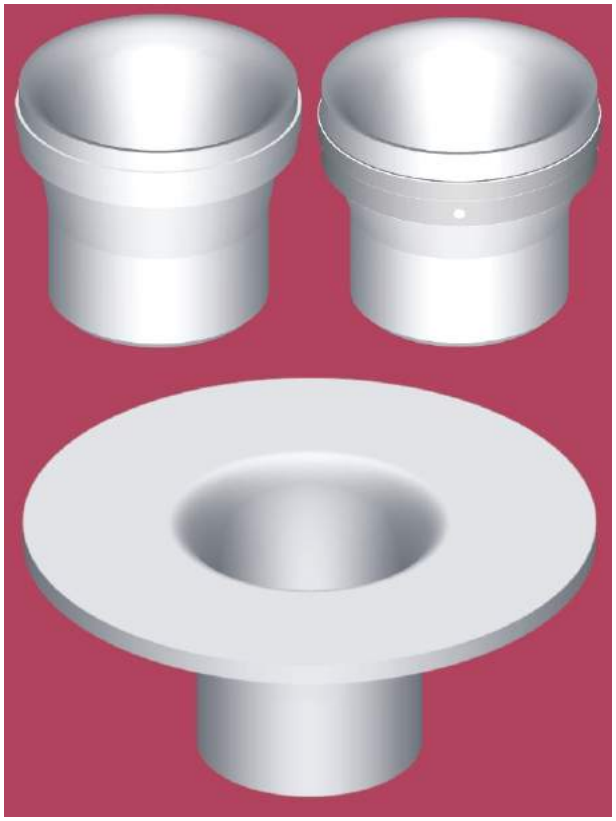

▶ **Other Types are available on request in full compliance with ISO-5167[Including ISA 1932 Nozzles], Venturi-Nozzles, ASME MFC-3M, ASME PTC-6 STANDARDS.**

SPECIFICATIONS

■ ISO-5167 Nozzle Types : Long Radius Nozzles is
1. High Ratio : $0.25 \leq \beta \leq 0.8$
2. Low Ratio : $0.2 \leq \beta \leq 0.5$

ISA 1932 Nozzle, Venturi-Nozzle

■ ASME MFC-3M, ASME PTC-6 Nozzle Types :
1. High Ratio : $0.5 \leq \beta \leq 0.8$
2. Low Ratio : $0.2 \leq \beta \leq 0.5$
3. Low Ratio, with Throat Tap : $0.25 \leq \beta \leq 0.5$

■ Pressure Taps : Pipe Wall Taps at D & D/2, Throat Tap.

■ Throat Calculation Codes : ISO-5167, ASME MFC-3M, L.K.SPINK., AGA NO.3.

■ Construction Types : Weld-In Type
: Holding Ring Type
: Knock Pin Type
: Flanged Type.

■ End Connection : Butt- Welds Type
: Flanged Type.



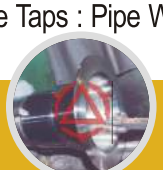

NOZZLE TYPE - ISO 5167

SAMIL will offer all flow nozzle types as per in full compliance with ISO-5167 standard and there are two types of long radius nozzle, which are called :

- High Ratio Nozzles and Low Ratio. For **β**-Values Between 0.25 and 0.5, either design may be used. and ISA-1932 Nozzle, Venturi-Nozzle.

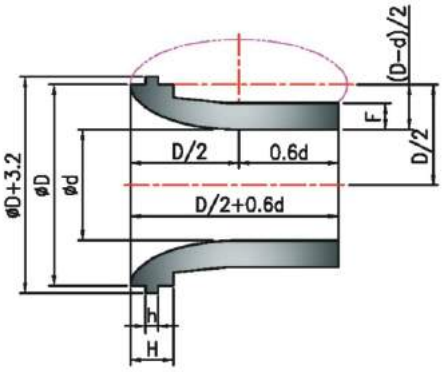

Flow Nozzles are suitable for determining the flow rate of fluids at high temperature and high pressure. and also can measure the flow rate of fluids containing a little amount of solid particles with less inconvenience than an orifice.

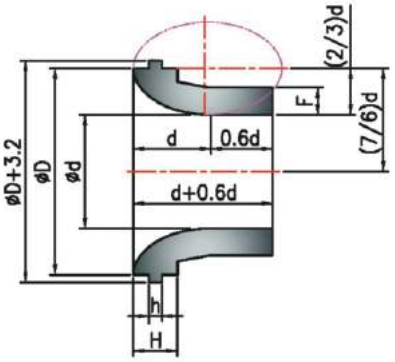

$3 \le H \le 0.15D$
$3 \le F$

[A] High Ratio $0.25 \le \beta \le 0.8$

$3 \le H \le 0.15D$
$3 \le F$

[B] Low Ratio $0.2 \le \beta \le 0.5$

NOZZLE TYPE - ASME MFC-3M

SAM IL will offer all flow nozzle types as per in full accordance with ASME MFC-3M for all below types and aslo ASME PTC 6 for Throat Tap and there are 3 types of long radius style ASME flow nozzles covered by this standard.

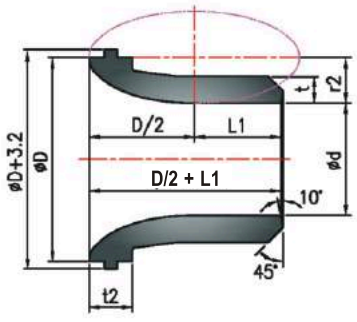

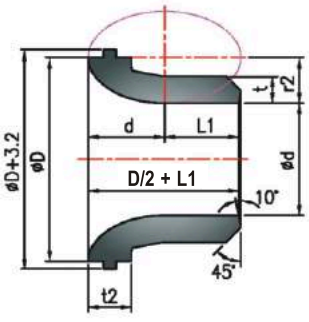

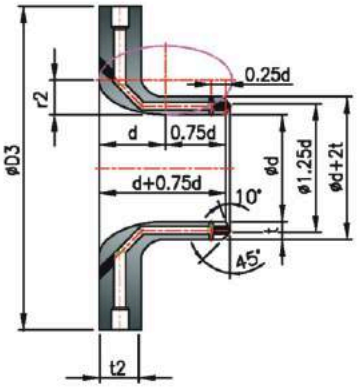

$0.5 \le \beta \le 0.8$
$L1 \le 0.6d$ or $\le D/3$
$r2 = (D-d)/2$
$2t \le D-(d+6mm)$
$3mm \le t2 \le 0.15D$

[A] High β Nozzle

$0.2 \le \beta < 0.5$
$0.6d \le L1 \le 0.75d$
$0.63d \le r2 \le 0.67d$
$3mm \le t \le 12mm$
$3mm \le t2 \le 0.15D$

[B] Low β Nozzle

$0.25 \le \beta < 0.5$

$r2 = 5/8d$
$t = 0.25d$
$t2 = 38mm$

[C] Low β Nozzle, with Throat Tap



SAMIL INDUSTRY CO.,LTD.

FLANGED TYPE FLOW NOZZLE

This is mounted to insert between piping flanges.
Flow Nozzle is designed in accordance with ISO 5167 and ASME specifications.

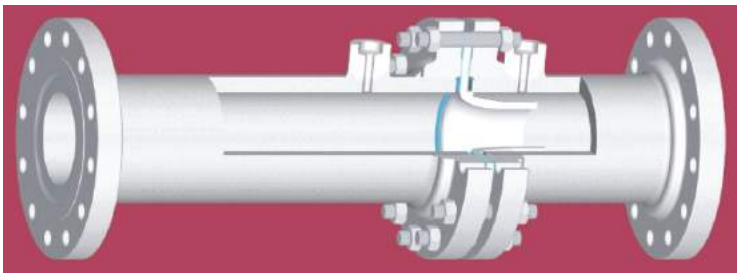

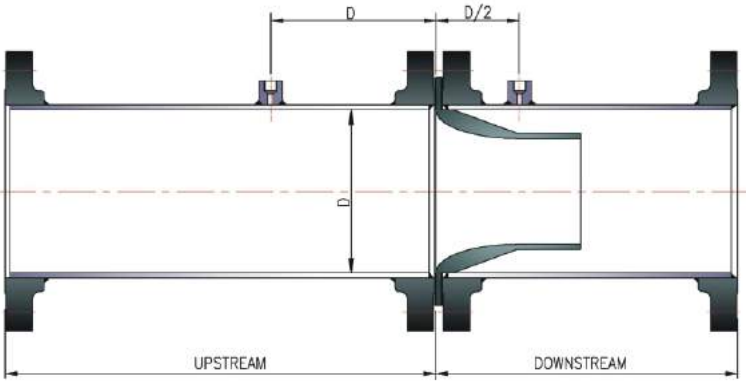

WELD-IN TYPE FLOW NOZZLE

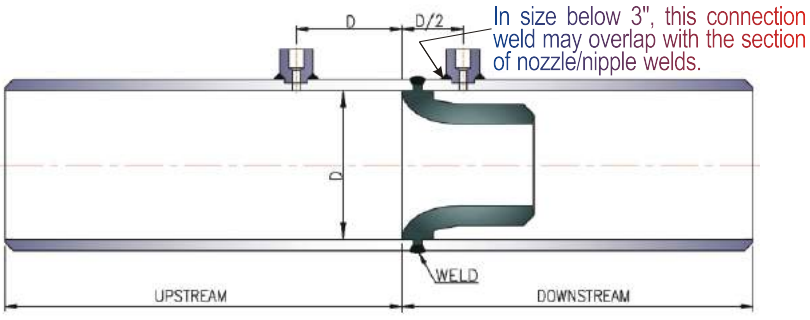

This type weld-in flow nozzle is used where flanges are not applicable such as high temperature and high pressure applications.
As **SAM IL** standard, unless otherwise specified, **SAM IL** will offer this type.

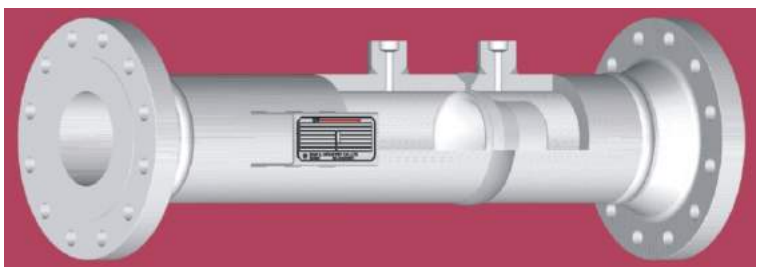





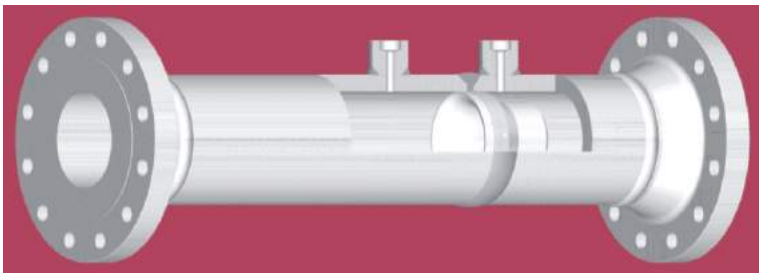

HOLDING RING TYPE FLOW NOZZLE

This type holding ring flow nozzle eliminate the welding of dissimilar materials[=for avoiding the welding operation between two kind of materials] because the ring , pins and pipe are of compatible materials.

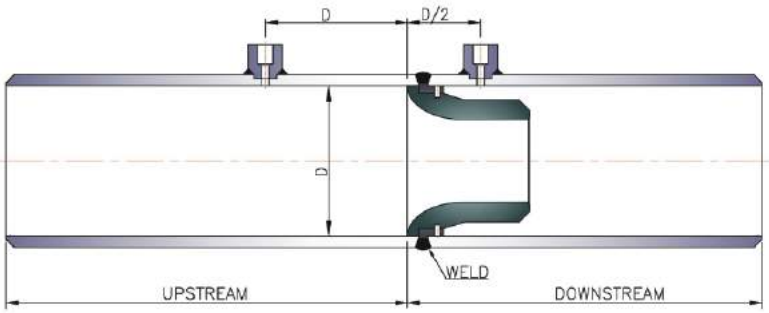

KNOCK-PIN TYPE FLOW NOZZLE

This Nozzle type also avoid welding operation between dissimilar materials however, they have rather difficult to assemble the nozzle from piping.
This type should basically be boring operation due to its structure.

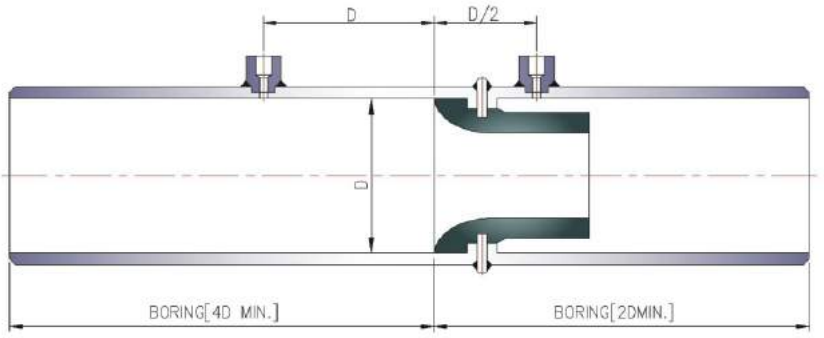

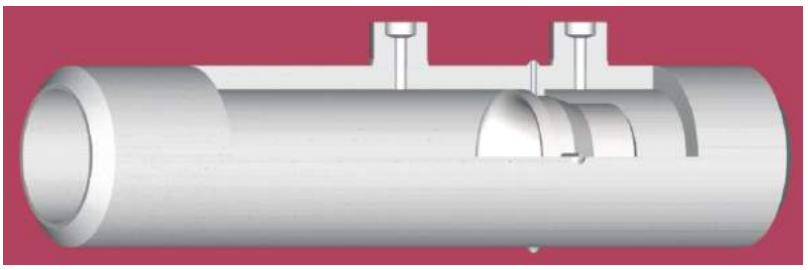

TYPICAL CONSTRUCTION OF FLOW NOZZLE WITH THROAT TAP [ASME PTC-6 STANDARD].

for welded assembly, Inspection port assembly may be installed as per PTC-6 std. on request.

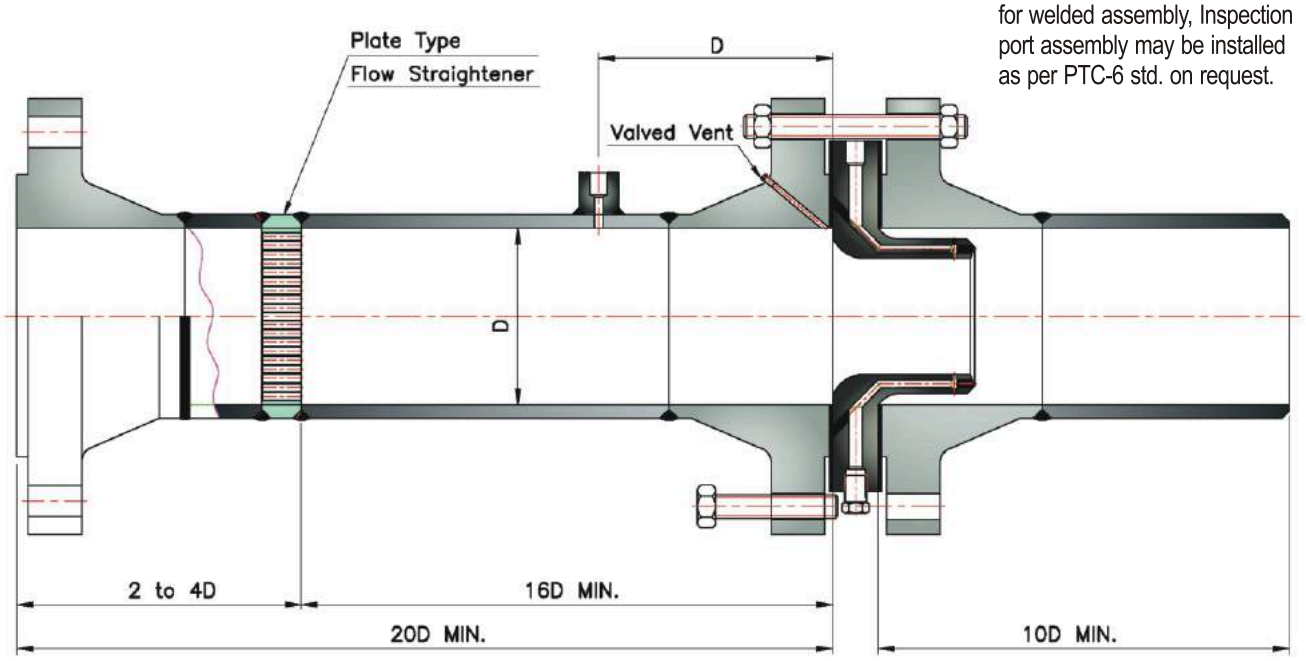

PRESSURE TAPPING



Full penetration groove weld
[Welding Adaptor]



Up to 800°F
[Welding Adaptor]

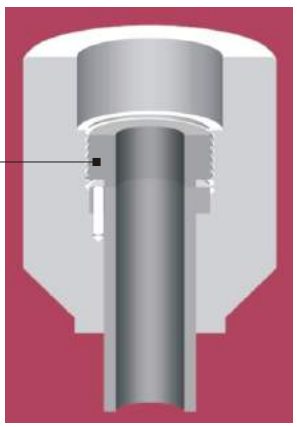

For temperature above 800°F
[Thermal Sleeve Welding Adaptor 2 1/4 Cr-Mo Steel]

[FROM ASME PTC 19.5-2004]

Nominal Inside Pipe Diameter[D]	Recommended Max. Diameters of Pressure Tap Holes
Under 2"	1/4" [6.35 mm]
2" & 3"	3/8" [9.5 mm]
4" to 8"	1/2" [12.7 mm]
10" and Over	3/4" [19.05 mm]

0.13D ~ 13 mm FOR ISO 5167-3 : 2003


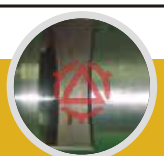

ASME PTC-6 THROAT TAP NOZLE

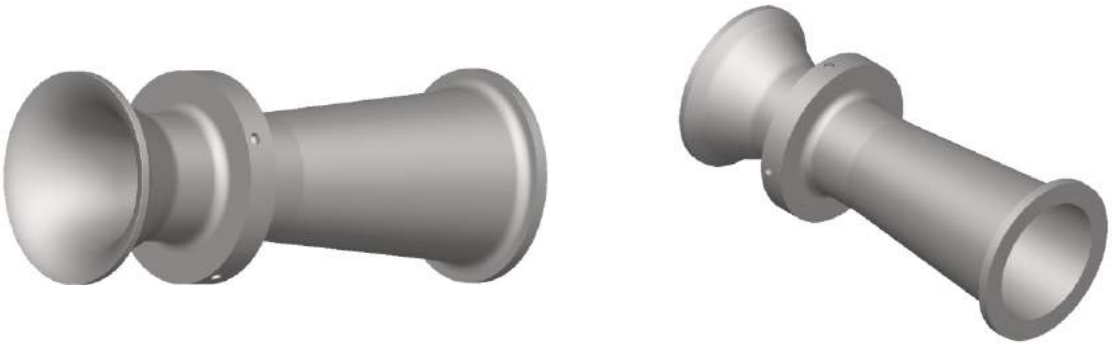

VENTURI-NOZZLE

The profile of the venturi-nozzle is axisymmetric. It consists of a convergent section, with a rounded profile, a cylindrical throat and a divergent section. The upstream face is identical with that of an ISA 1932 Nozzle.

The upstream pressure tappings shall be corner tappings [see below drawing]. The tappings may be located either in the pipe of its flanges or in carrier rings.

The throat pressure tappings shall be comprise at least four[4] single pressure tappings and **SAM IL** will offer the piezometer ring on request only.

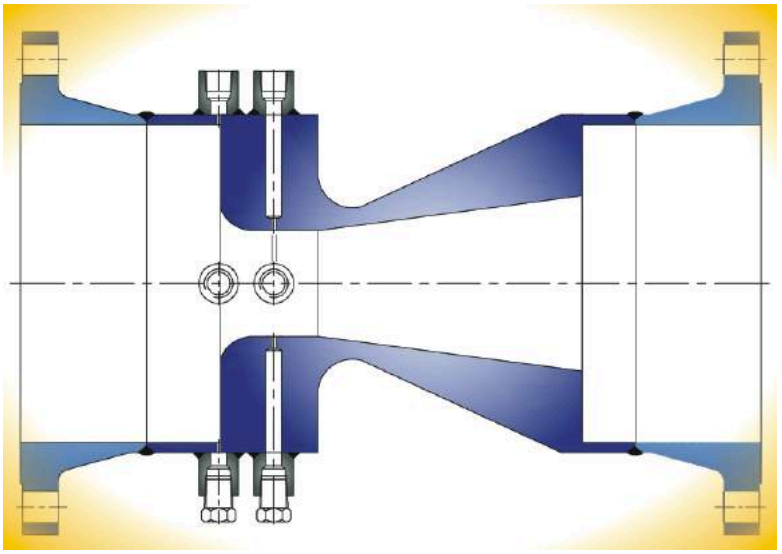

Profile of Venturi - Nozzle



SAMIL INDUSTRY CO.,LTD.

SINCE 1979
SAMIL INDUSTRY CO.,LTD.

FLOW NOZZLES

NO.	BY	DATE	REVISION
1			
2			
3			
4			

SHEET	OF
CONTRACT	DATE
REQ. P.O	
BY / CHK'D / APPR.	

FLOW NOZZLES

1. TYPE : LONG RADIUS ■ OTHER :
2. STANDARD : ISO-5167 ☐ OTHER :
3. BORE : MAX. RATE ■ NEAREST 1/8" ☐
4. MATERIAL : 304SS ☐ 316SS ■ OTHER :
5. RING MATERIAL & TYPE :
6. MODEL NO. & MFR. : SEE BELOW NO. 40 & 41

FLANGES OR SPOOL[PIPE]

7. TAPS : RADIUS ■ THROAT ☐ OTHER :
8. TAP SIZE : 1/2" SW ■ OTHER :
9. TYPE : WELD NECK ☐ SLIP ON ☐ THERADED ☐
10. MATERIAL : STEEL ■ OTHER :
11. FLANGE INCLUDED ☐ OTHER : BY OTHER
12. FLANGE RATING : ANSI 300# RF OTHER :

FLUID DATA	★	13	Tag No.				
		14	Service				
		15	Line No.				
	★	16	Fluid Name				
	★	17	Fluid State				
	★	18	Maximum Flow [m^3/hr]				
	★	19	Normar Flow [m^3/hr				
	★	20	Press. @ Max. / Nor. [Kg/cm^2 g]				
	★	21	Temp. @ Max. / Nor. [°C]				
	★	22	Sp. Gr. / Density at Base				
	★	23	Sp. Gr. / Density at Oper.				
	★	24	Super Comp. Factor [zf]				
	★	25	Mol. W.T. Cp / Cv				
	★	26	Operating Viscosity [cp]				
		27	Base Press. Base Temp.				
METER	★	28	Type of Meter				
	★	29	Diff. Range [mmH2O]				
		30	Static Press. Range				
	★	31	Full Scale Range [m^3/hr]				
		32	Chart Multiplier				
NOZZLE & FLANGE OR PIPE	★	33	Flange Rating				
	★	34	Line Size Sch.				
	★	35	Line Material				
	★	36	Pair[s] of Tapping				
	★	37	Flange Type				
ACCESSORY		38	Nipple				
		39	Block Valve				
MANU'ER DATA		40	Model				
		41	Manufacture	SAMIL	SAMIL	SAMIL	SAMIL
	★	42	Q'ty				

REMARK : "★" MARKED COLUMNS SHALL BE FILLED UP BY CUSTOMER, IF POSSIBLE.
NOTE :

http : // www.samilind.co.kr

VENTURI TUBES - 4

IN THIS CHAPTER - 4

Here is introduce the measuring primary devices of fluid flow by means of the differential pressure that is venturi tube to use when is important to keep lower permanent pressure loss than other primary devices.

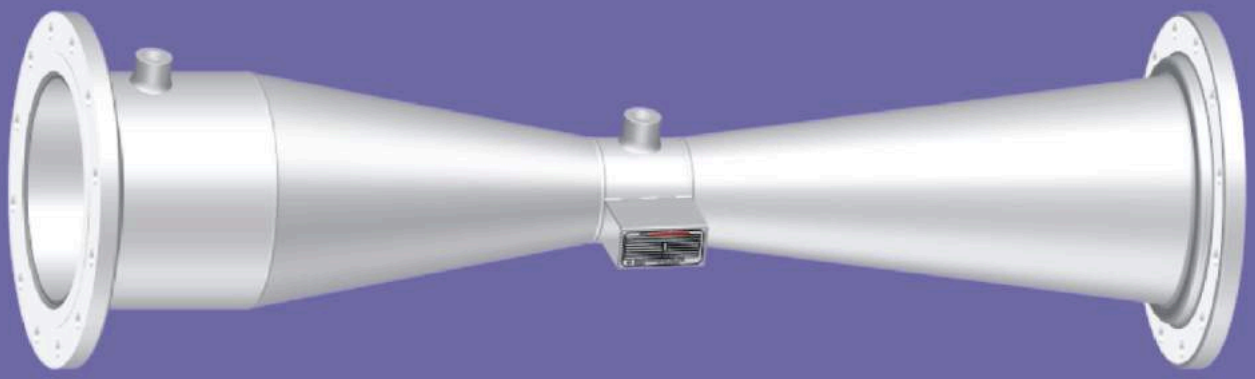

VENTURI TUBES

SAMIL INDUSTRY CO.,LTD.

GENERAL DESCRIPTION

Comparing with orifices and flow nozzles, the venturi tube generally have a little complicated structure, required higher material and costs, and tend to be larger in size. However, venturi tubes offer advantages including an extremely smaller pressure loss, a higher durability and a lower chance of catching a sludge media and sediment than other throttle elements.
The venturi tube mostly used for measurement of flow wherever is important to keep the net permanent pressure loss at a minimum.

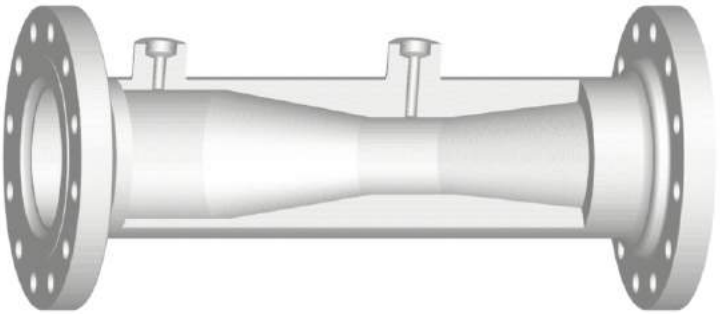



■ **SAM IL** is designed and manufactured the venturi tube in full compliance with ISO-5167 and ASME MFC-3M standards.

SPECIFICATIONS

■ Venturi tube type : Machined Type
Welded Type
Tetragon Duct Type

■ End Connection : Butt-Weld
Flanged[Slip-On & Welding Neck]

■ β-Ratio Range : Machined Type is within
β Between 0.4 and 0.75 inclusive

Welded Type is within
β Between 0.4 and 0.7 inclusive

■ Throat Calculation Codes : ISO-5167, ASME MFC-3M, L.K.SPINK., AGA NO.3.

■ **OPTIONS-1** Pressure Tappings leading into Piezometer Ring.

■ **OPTIONS-2** Full Jacket or Semi Jacket for Heating or Cooling.



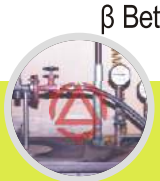

DRAWINGS

Generally, Venturi tube with a machined convergent section can be used in pipes of size between 2" and 10" However, in the case machined type is of large size of 8" and 10", they have disadvantages because of required higher costs due to huge materials consumed.

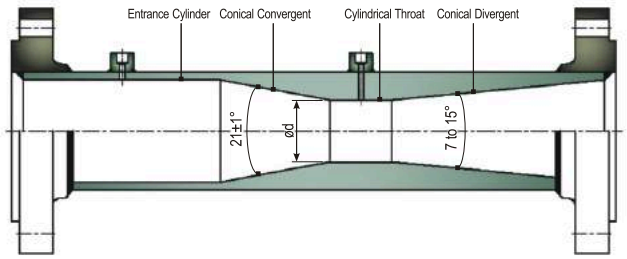

Machined Type - Flanged End

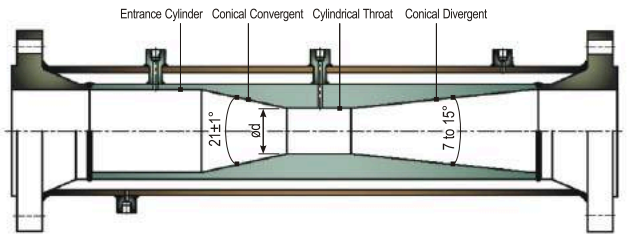

Construction of Jacket[Model : SVT-J]

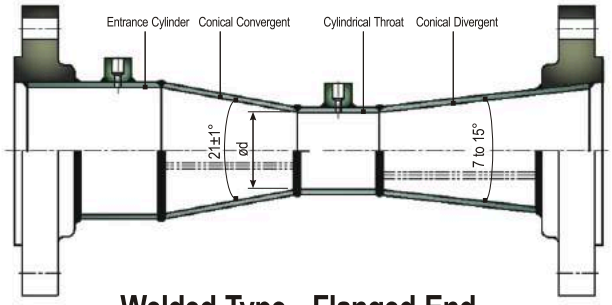

Welded Type - Flanged End

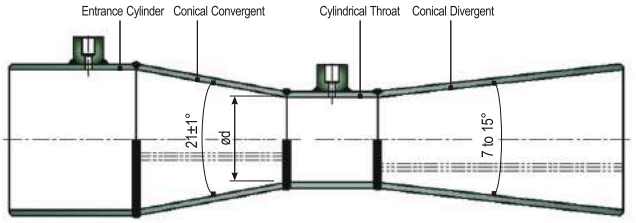

Welded Type - Butt Welds End

SAM IL STANDARDS

■ Conical Convergent Angle : 21° ±1°

■ Conical Divergent Angle : 14° ±1°

■ End Connection : Butt-Welds
Flanged Connection is available on request as Welding- Neck or Slip-On Type.

■ Tapping Adaptors : 1/2" NPT
Others are available on request [Example : 1/2" SW, 3/4" NPT or SW, etc.]

■ Tapping Nos. : 1[one] Upstream Pressure Tapping and 1[one] Downstream Pressure Tapping
There may be used with several sets of pressure tappings on request.



TETRAGON DUCT & TAPLESS TYPE VENTURI

SAMIL INDUSTRY CO.,LTD.

MODEL : SVT

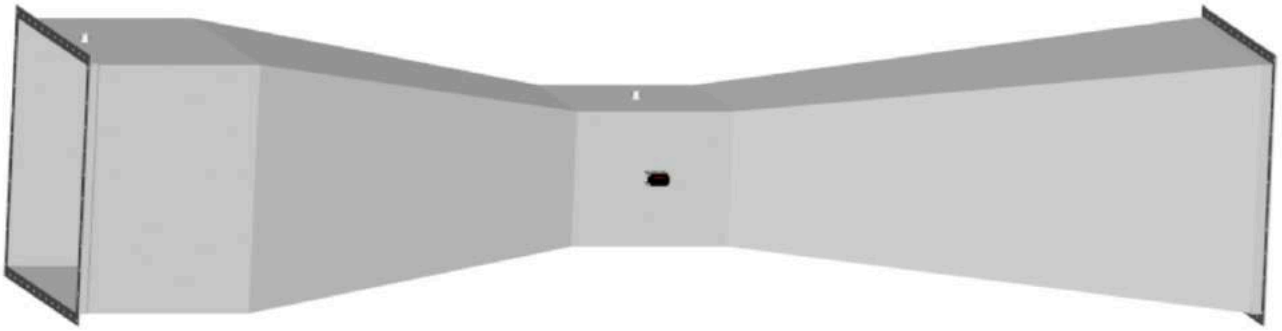

The tetragon is designed and manufactured in order to fit in with tetragon duct type piping and the throat have the same area with its throat diameter calculated by ISO 5167, ASME MFC-3M or L.K.SPINK. Standards.

MODEL : STV

The tapless venturi tube, Which is no need pressure tappings for differential pressure measurement, can be effectively used [with less pressure drop] for flow measurement of a slurry fluid, a fluid with suspensions, or a corrosive fluid, It also can measure a liquid in which solidifies at low temperatures, or a liquid which vaporizes at high temperatures.



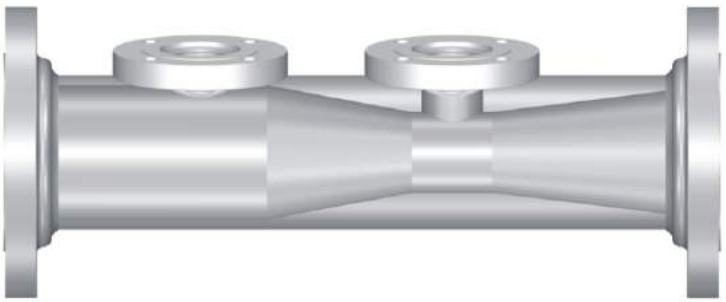

- Max. Temperature : -40°C to 280°C
- Pressure Rating : up to JIS 20K RF
  up to ANSI 300LB.





SINCE 1979
SAMIL INDUSTRY CO.,LTD.

VENTURI TUBES

NO.	BY	DATE	REVISION
1			
2			
3			
4			

SHEET	OF
CONTRACT	DATE
REQ. P.O	
BY / CHK'D / APPR.	

VENTURI TUBES

1. TYPE : WELD-IN ■ OTHER :
2. STANDARD : ISO-5167 ☐ OTHER :
3. BORE : MAX. RATE ■ NEAREST 1/8" ☐
4. MATERIAL : 304SS ☐ 316SS ■ OTHER :
5. RING MATERIAL & TYPE :
6. MODEL NO. & MFR. : SEE BELOW NO. 41 & 42

FLANGES

7. TAPS : THROAT ■ TAPLESS ☐ OTHER :
8. TAP SIZE : 1/2" SW ■ OTHER :
9. TYPE : WELD NECK ☐ SLIP ON ☐ THERADED ☐
10. MATERIAL : STEEL ■ OTHER :
11. FLANGE INCLUDED ☐ OTHER : BUTT-WELD
12. FLANGE RATING : ANSI 150# RF OTHER :

FLUID DATA	★	13	Tag No.				
		14	Service				
		15	Line No.				
	★	16	Fluid Name				
	★	17	Fluid State				
	★	18	Maximum Flow [m^3/hr]				
	★	19	Normar Flow [m^3/hr				
	★	20	Press. @ Max. / Nor. [Kg/cm^2 g]				
	★	21	Temp. @ Max. / Nor. [°C]				
	★	22	Sp. Gr. / Density at Base				
	★	23	Sp. Gr. / Density at Oper.				
	★	24	Super Comp. Factor [zf]				
	★	25	Mol. W.T. Cp / Cv				
	★	26	Operating Viscosity [cp]				
		27	Base Press. Base Temp.				
METER	★	28	Type of Meter				
	★	29	Diff. Range [mmH2O]				
		30	Static Press. Range				
	★	31	Full Scale Range [m^3/hr]				
		32	Chart Multiplier				
VENTURI & FLANGE OR PIPE	★	33	Flange Rating				
	★	34	Line Size Sch.				
	★	35	Line Material				
	★	36	Pair[s] of Tapping				
	★	37	End Connection				
		38	Divergent Angle				
ACCESSORY		39	Nipple				
		40	Block Valve				
MANU'ER DATA		41	Model				
		42	Manufacture	SAMIL	SAMIL	SAMIL	SAMIL
	★	43	Q'ty				

REMARK : "★" MARKED COLUMNS SHALL BE FILLED UP BY CUSTOMER, IF POSSIBLE.
NOTE :



http//:www.samilind.co.kr

CONE TYPE FLOWMETER - 5

IN THIS CHAPTER - 5

Here is introduce the measuring primary devices of fluid flow by means of the differential pressure that is Cone Type Flowmeter to use new delta-P[ΔP] theory manufactured by SAMIL.

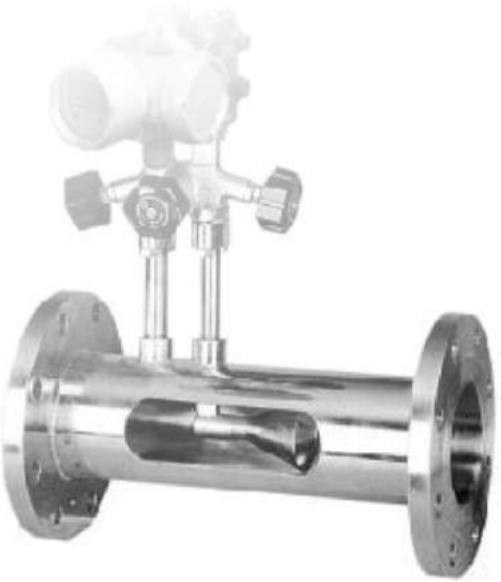

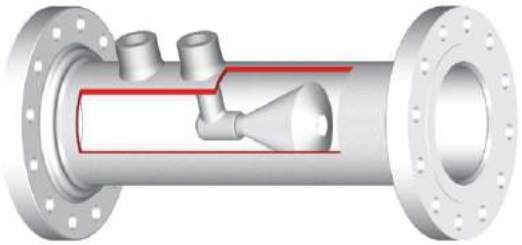

SAMIL INDUSTRY CO.,LTD.

#434-12, Nonhyun-Dong, Namdong-Gu, Incheon, Korea
Tel : 82-32-819-9671~7, Fax : 82-32-819-9693~4
www.samilind.co.kr
Samilind79@samilind.co.kr

CONE TYPE FLOWMETER

SAMIL INDUSTRY CO.,LTD.

GENERAL DESCRIPTION

The Cone type flow meter is a differential pressure type flow meter primary device. The Cone type produces a differential across a centered cone in a precision meter tube. The differential pressure is the difference in pressure between the static line pressure P_1 measured at the upstream tap and the pressure from a tap located at the forward section of the cone P_2.

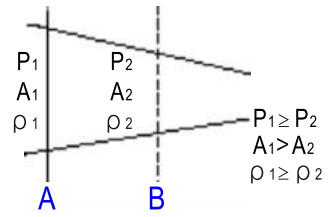

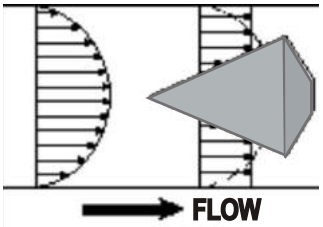

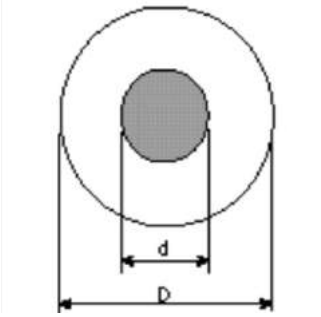

SAMIL's Cone Type Flowmeter is flow detecting sensor based on differential pressure developed by completely new concept. Uniquely deisgned Taper shaped cone generates a very stable and linear differential pressure corresponding to flow rate.
In combination with normal differential pressure transmitters, remote transmission of flow rate is easily possible.

■ FEATURES

=>Wide application :
Cone Type Flowmeter(SCM) can measure almost all process fluids, i.e., Liquids, slurries, gases and steam.

=>Short Straight Runs :
By the unique flow restriction theory, the required straight runs both for upstream and downstream are much shorter than those for traditional orifice plates.
Effective for space and cost saving for plant construction.

=>Wide Range ability :
Cone Type flowmeter offers 15 : 1 range ability which is much wider than orifice, flow nozzle and venturi tube.

=>Low Permanent Pressure Loss :
The signal stability of Taper Seg is more stable than that of orifice plates. Thus, the required △P and permanent pressure loss are also much lower than orifice system. This saves total energy consumption in plants.

=>Durable against wear and sticking :
Cone Type has "Self-Cleaning" capability because the fluid runs away from the beta edge of the Taper Cone.

=>Easy Handling :
The system of instrumentation is the same as the orifice system. Replacement of the sensing part only is also possible.

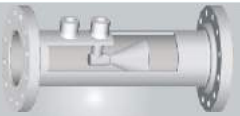

■ RECOMMENDED APPLICATIONS

=>Steam Lines
=>Various Gas Lines
=>Burning Gas Lines
=>Water and Other Liquids
=>Slurries
=>Others

SYSTEM CONFIGURATION

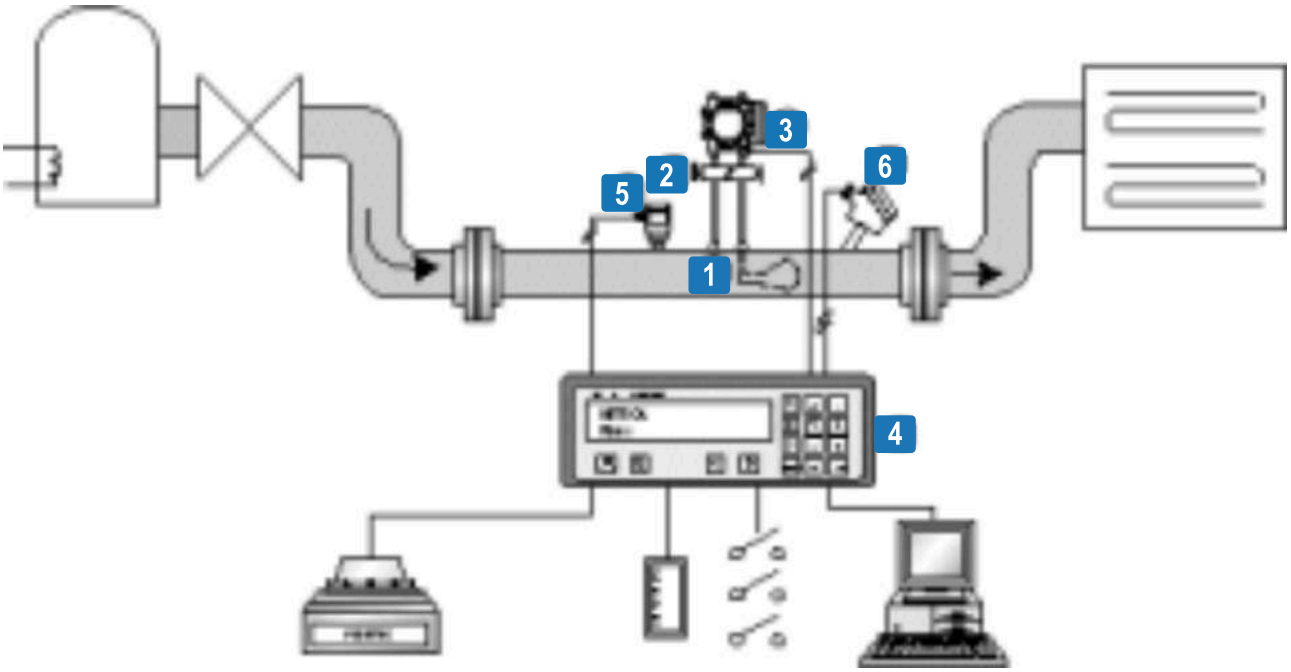

❑ Measurement of Non-Compresible Fluids

1 SCM Differential Pressure Sensor
2 3-Way or 5-Way Valve
3 Differential Pressure Transimitter
4 Flow Indicator or Flow Calculater

❑ Measurement of Compresible Fluids

1 SCM Differential Pressure Sensor
2 -Way or 5-Way Valve
3 ifferential Pressure Transimitter
4 low Indicator or Flow Calculater
5 ressure Sensor
6 emperature Sensor

CONE TYPE FLOWMETER

SAMIL INDUSTRY CO.,LTD.

MEASURING PRINCIPLE

The SCM is a differential pressure type flowmeter. Theories behind differential pressure type flowmeters have existed for over a century. The principal theory among theses is Bernoulli's theorem for the conservation of energy in a closed pipe. This says that for a constant flow, the pressure in a pipe is inversely proportional to the square of the velocity in the pipe. Simply, the pressure decreases as the velocity increases. For instance, as the fluid approaches the SCM, it will have a pressure of P_1. As the fluid velocity increases at the constricted area of the SCM, the pressure drops to P_2.

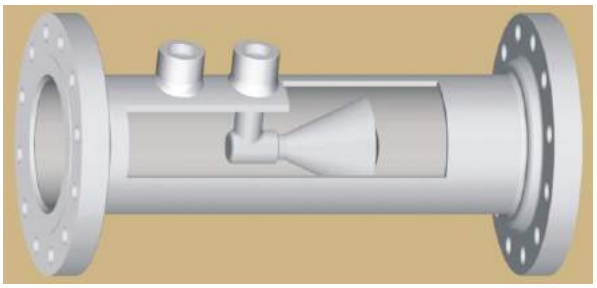

MAJOR FEATURES : entirely new and innovative differential pressure type of flow measurement by ΔP theory.

- An accuracy of ±0.5% in the majority of applications and head loss approximately 20% of the generated Diff.
- A repeatability of ±0.1%.
- A typical range of 15 : 1.
- Minimum Reynolds No. of 8000.
- Used for static mixing by vortex mixing downstream of the cone.
- Used for measuring fluid of water, steam, gas, etc., as well as many other fluids.
- Differential is generally lower than other differential producers and lower permanent loss [approximately 20% of the generated differential pressure], a constant coefficient over a wide Reynolds No. Range.

SPECIFICATIONS :

- Applicable Temperature : 370°C[700°F].
- Applicable Pressure : 10kg$_f$/cm^2[142psi] as a standard and available up to 40kg$_f$/cm^2[600psi] on request.
- Material : 304SS, 316SS and others also are available on request.
- Recommended Straight Run : Upstream = 3D ~ 5D and Downstream = 5D.
- Minimum Straight Run : Upstream = 1D ~ 2D and Downstream = 3 ~ 5D.

$$\beta = \sqrt{\frac{D^2 - d^2}{D}}$$

$$m = \frac{D^2 - d^2}{D^2}$$

$$d = \beta_{taper\text{-}cone} \cdot D$$

β = Beta Ratio
m = Area Ratio
D = Pipe Inside Diameter
d = Outside Diameter of Cone.

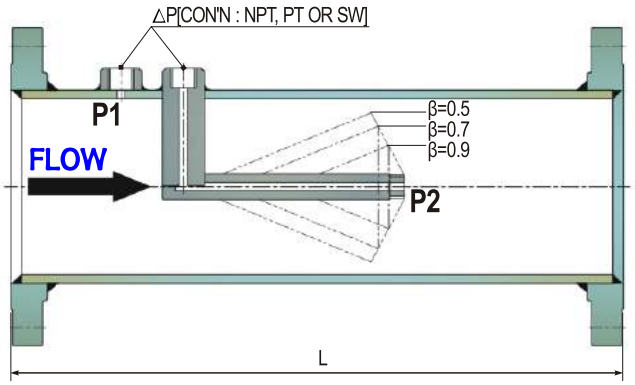

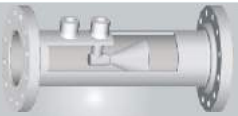

OUTLINE DRAWING

FLANGE CODES
ASME/ANSI, KS, JIS, API & OTHERS
ARE AVAILABLE

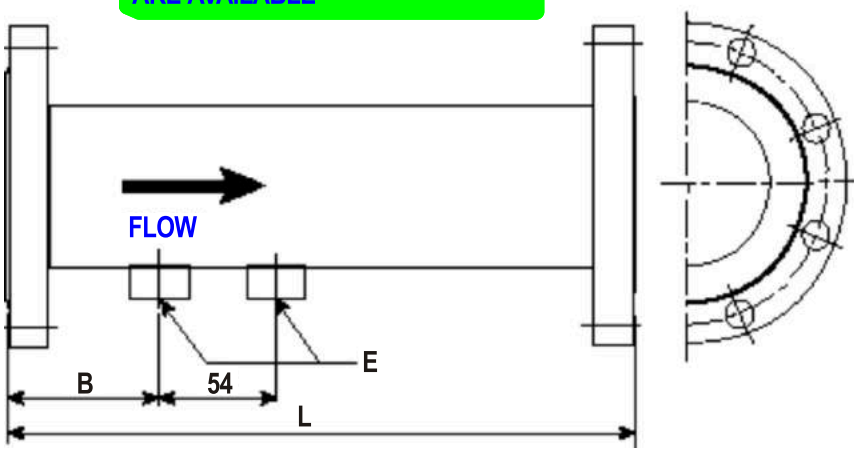

MODEL	SIZE		L(mm)	B(mm)	E(NPT or PT)	REMARK
	A(mm)	B(inch)				
SCM-15	15A	1/2"	200	65	1/4	
SCM-20	20A	3/4"	200	65	1/4	
SCM-25	25A	1"	200	65	1/4	
SCM-40	40A	1 1/2"	255	75	1/4	
SCM-50	50A	2"	300	90	1/2	
SCM-65	65A	2 1/2"	300	90	1/2	
SCM-80	80A	3"	350	90	1/2	
SCM-100	100A	4"	400	100	1/2	
SCM-150	150A	6"	560	110	1/2	
SCM-200	200A	8"	660	127	1/2	
SCM-250	250A	10"	710	127	1/2	
SCM-300	300A	12"	760	134	1/2	
SCM-350	350A	14"	760	150	1/2	
SCM-400	400A	16"	760	150	1/2	
SCM-450	450A	18"	760	150	1/2	
SCM-500	500A	20"	915	150	1/2	
SCM-600	600A	24"	1220	150	1/2	
SCM-700	700A	28"	1220	150	1/2	

*Larger size than the above table are available



INSTALLATION EXAMPLE

■ LIQUID MEASUREMENT(CLEAN LIQUIDS)

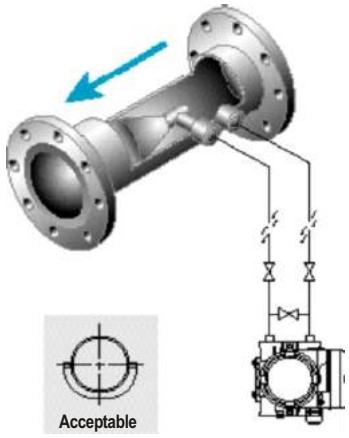

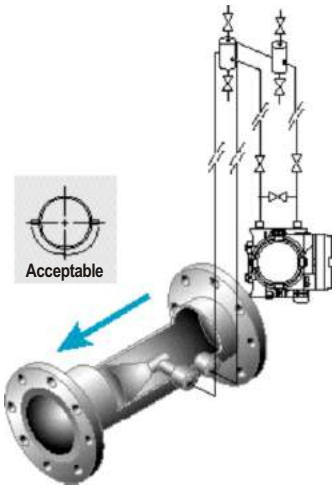

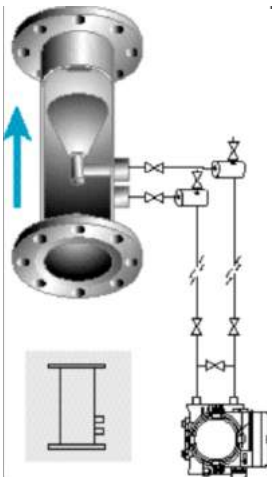

■ GAS MEASUREMENT(CLEAN AND DRY GAS)

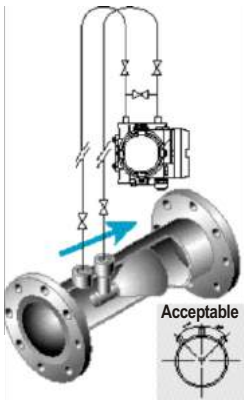

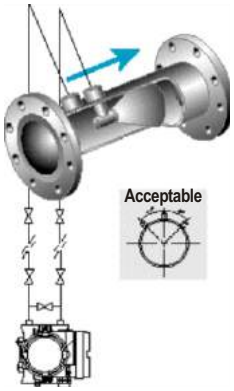

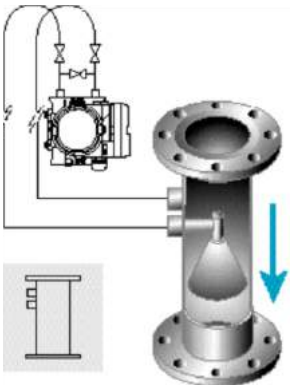

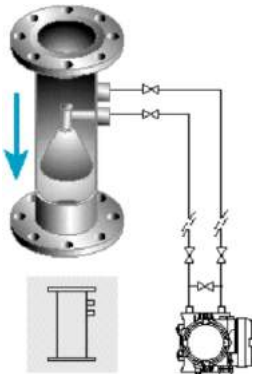

■ VAPOUR MEASUREMENT(SATURATED, SUPERSATURATED)

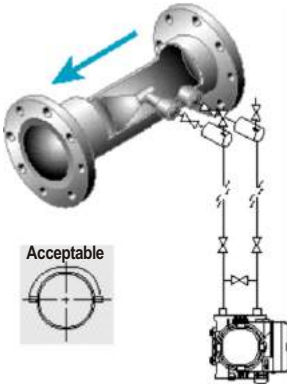

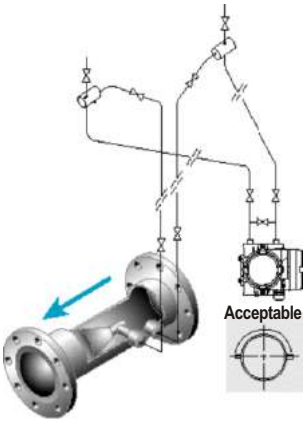

TAPER SEG TUBE - 6

IN THIS CHAPTER - 5

Here is introduce the measuring primary devices of fluid flow by means of the differential pressure that is Taper Seg Tube to use new delta-P[ΔP] theory.

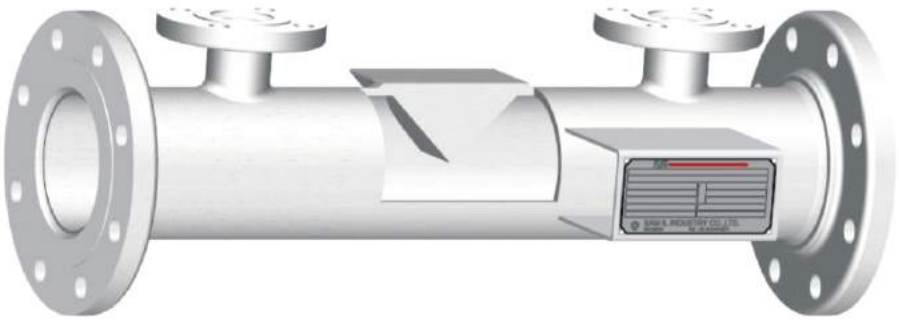

SAMIL INDUSTRY CO.,LTD.

GENERAL DESCRIPTION

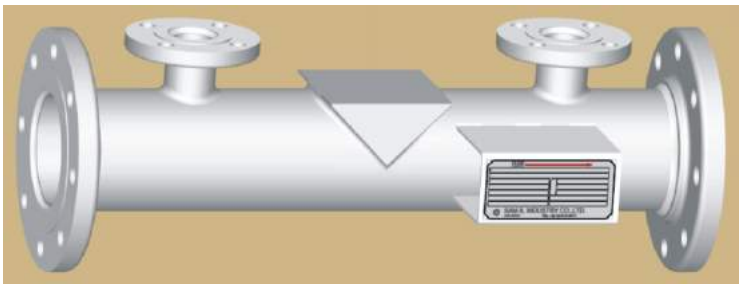

The Fig. on the right shows the basic appearance of the Taper Seg Tube meter. The fluid is diverted downward is similar fashion to a segmental shape as opposed to sharp edge. Pressure taps are located approximately one diameter upstream and downstream.

MAJOR FEATURES

- Available in standard sizes of 1/2 to 24 in.(Larger sizes available)
- Constant coefficient over a wide Reynolds Number range.
- Suitable for slurry, corrosive, abrasive, or clean liquid, gas or vapor flows.
- Low overall pressure loss.
- Integral Taper Seg tube elements connect directly to DP Transmitters.
- The product differential is a function of the ratio of segment height **H** to the meter body diameter **D**.

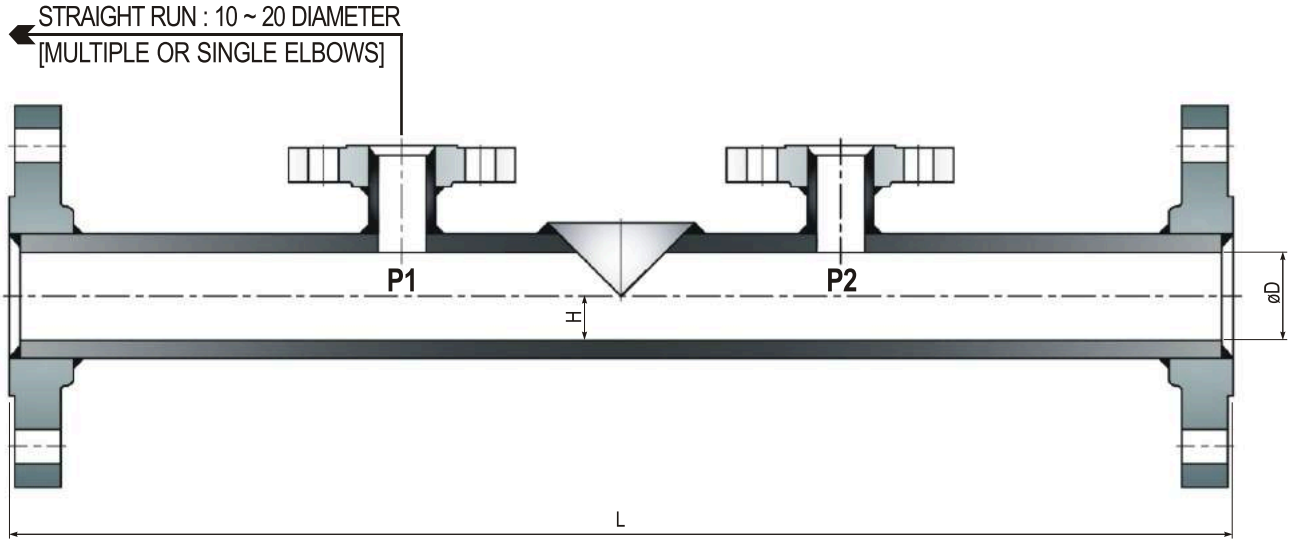

TAPER SEG FLOWMETER

SAMIL INDUSTRY CO.,LTD.

MEASURING PRINCIPLE

The line fluid flow is downward similar to a segmental orifice plate, however it is guided along a slopping " Taper Seg" shape rather than a sharp edge. The pressure taps are located upstream and downstream of the taper seg.

The differential produced by the device is a function of the ratio between the taper seg opening, "H", and the diameter of the body, "D".

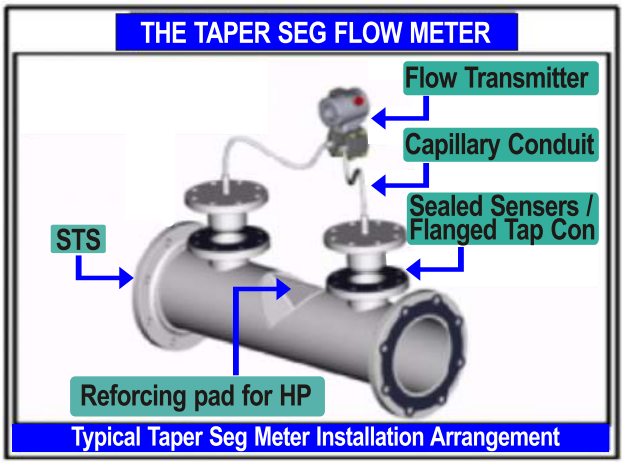

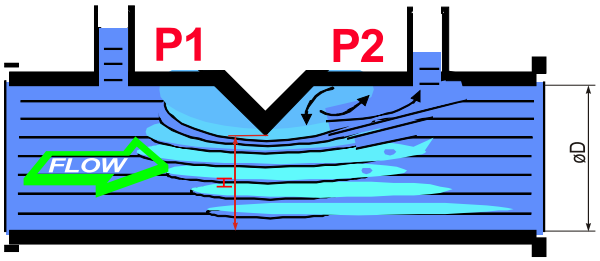

- No Critical Surface Dimension
- Slanted upstream and downstream faces
- Minimal upstream/downstream piping required
- Bi-Directional Flow
- Simple Design : Easy to understand.
- No internal Moving Parts.

$$Q \sim Sqrt(\triangle P)$$

$$\beta_{wedge} = \frac{d}{D} = \left(\frac{1}{\pi}\left\{\arccos\left(1-\frac{2H}{D}\right)-2\left(1-\frac{2H}{D}\right)\left[\frac{H}{D}-\left(\frac{H}{D}\right)^2\right]^{1/2}\right\}\right)^{1/2}$$

Lower permanent pressure losses than orifice plate mean lower pumping costs for the life of the installation.

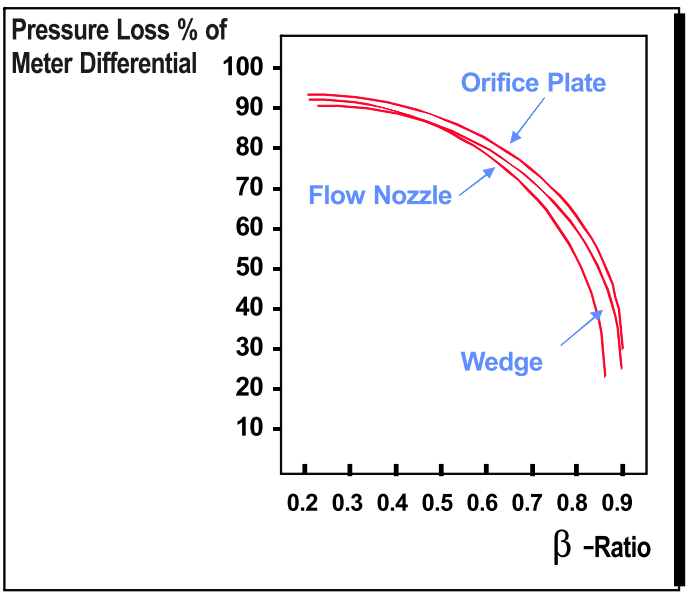

WHEN TO USE THE STS

- Chemical Industry : Blending, Mixing Dyes and Viscous Fluids.
- Petrochemicals : High Viscosity and Black Liquors
- Oil and Gas : Water Injection, Custody Transfer
- Paper and Pulp : Hi concentration stocks. Timber Industry usage
- Metals and Mining : Powered or magnetic slurries. Abrasive Flows.
- Cement Industry : Problematic slurry flows.
- Power and Utilities : Fuel oil and steam flows. Boiler feeds.

ADVANTAGE

- Lower Reynolds No.
- Better Rangeability
- Accuracy not dependent on sharp edge
- Lower Energy Costs
- Viscous Fluid Applications
- Less upstream piping required
- Dirty Service(Slurries, Fluids with Solids in Suspension)

DISADVANTAGE

- Less Application History
- Initial Installed cost





TAPER SEG FLOWMETER

SAMIL INDUSTRY CO.,LTD.

SPECIFICATION

Specifications	Taper Seg Meter	Orifice
- Accuracy	- 0.5%	- 0.75% to 1.5%
- Turn Down	- 5 : 1	- 5 : 1
- Reynolds No.	- > 500	- >30000
- Output	- Square Root	- Square Root
- Sizes	- 1/2" - > 24"	- > 1"
- Straight Upstream Piping (Multiple or Single Elbows Upstream & other disturbances are neglible at	- 10 to 20 Diameters	- 10 to 36 Diameters

INSTALLATION

Recommended Installation Orientation



The proper operation of the Taper Seg Flow Meter is relatively forgiving of the specific installation arrangement imposed. Nevertheless, to achieve the best results, the recommended installation parameters enumerated below should be observed and incorporated. The adverse results arising from failure to properly install the flow element can include plugging of impulse lines and/or tap holes, air(gas or unwanted secondary phase) entrapment in the taps and/or impulse lines, introduction of a minor hydrostatic head effect(in a vertically oriented installation) or Kd^2 shift(i.e. Accuracy impairment)

Meter orientation a horizontal orientation is preferred and typical for most installation.
The element should be rotated between 45 to 90 degree resulting the tap locations that substantially allow any undissolved solids to easily pass beneath the Taper Seg without build-up and also minimizes air(or gas) entrapment at tap locations.
Vertical installations may result in a hydrostatic head effect due to the elevation difference of the individual impulse lines. This can be corrected by adjusting the transmitter.



STRAIGHT LENGTH

TABLE -1 Recommended Straight Length

Upstream disturber	Upstream Straight Length	Downstream Straight Length
Partially Opened Gate Valve	20 D	5 D
Concentric Expander	10 D	5 D
Concentric Reducer	10 D	5 D
One(1) elbow	10 D	5 D
Two(2) elbow close coupled in plane	10 D	5 D
Two(2) elbow closed coupled out of plane	20 D	5 D

CALCULATION RESULT

Purchaser : YEOCHUN NCC CO.,LTD. SHEET : OF
Project Name : #3 NCC DATE :
Job No. : - Rev. : 0

TAPER SEG FLOWMETER SIZING CALCULATION

Steam/Gas Mass Flow

Fluid Name : STEAM(S)
Service : SAMPLE

1)	Tag No.		FE-SAMPLE
2)	Pipe Inside Diameter (D)		102.2604
3)	Taper Seg Element Ratio(H/D)		0.4565881
4)	Taper Seg Flow Coefficient(kd^2)		5.4696895
5)	Specific Volume of Steam/Gas	in m3/kg	0.298801804
6)	Gas Expansion Factor		1.0
7)	Viscosity in Centipoises(μ)	in cP	0.017
8)	Flowing Process Temperature	in °C	210
9)	Flowing Process Pressure	in kg/cm2g	6.3
10)	Thermal Expansion Factor of Wedge Assembly(Fa)		1.006
11)	Flow Range	in kg/hr	4000
12)	Differential Pressure at Flow Range(h)	mmH2O at 60 degF	2500
13)	Max. Flow Rate (q)	in kg/hr	3500
14)	Differential Pressure at Max. Flow(h)	mmH2O at 60 degF	1911.516
15)	Nor. Flow Rate	kg/hr	2335
16)	Differential Pressure at Nor. Flow(h)	mmH2O at 60 degF	848.7284
17)	Permanent Pressure Loss at Flow Scale	mmH2O at 60 degF	1166.724
	Reynolds No. at Flow Scale		690106.4
	Reynolds No. at Max. Flow		603843.1
	Reynolds No. at Nor. Flow		402849.6

CALCULATED BY SAMIL INDUSTRY CO.,LTD. MODEL : STS

Flange Size & Rating : 4" ANSI 300# SO-RF
Taps Con'n & Rating : 3" ANSI 300# SO-RF
Wedge Mat'l : A105
Line Mat'l : A106 GR.B

NOTE : 1. PPLOSS at Max. Flow(3500 kg/hr) : 889.9606 mmH2O @ 60 degF
2. PPLOSS at Nor. Flow(2335 kg/hr) : 393.4759 mmH2O @ 60 degF

SAMIL

*Calculation report forms may be changed on the program upgrade.





CONDENSATE POT

SAMIL INDUSTRY CO.,LTD.

SPECIFICATIONS

- Materials : C.S, 304SS & 316SS, etc.
- Max. Pressure : 350kg/cm^{2}g
- Model : SCP-20,40,80 & 160.
- Options : Double Vent Plug.

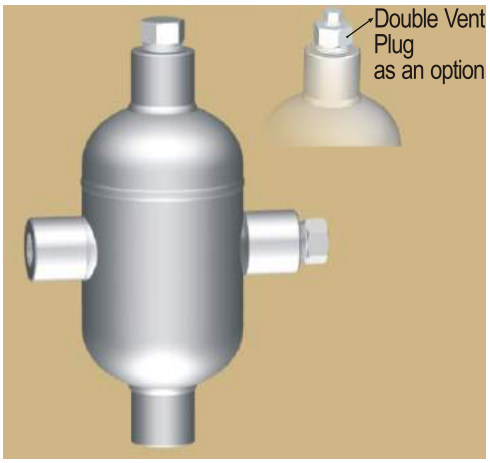

WHERE IT USE :

- Installed it in order to prevent for liquid to contact directly with an instrument.
- Installed it when specific gravity is changed from starting on the operation to on operating.
- Used for protecting an instrument from the caustic fluids.
- In case the fluid is of vapor at high temperature, used for condensation of the vapor.
- Used in the liquid of high viscosity.

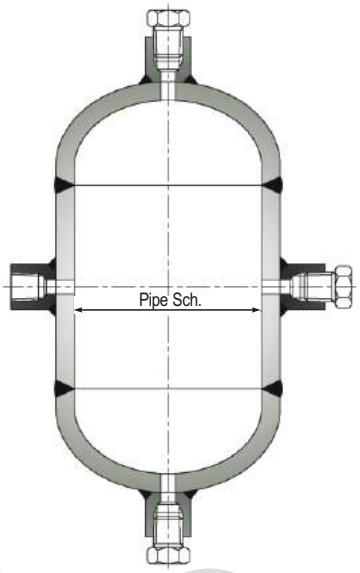

- Tappings Nos. : 4 ea as 90° orientation
- Plug : 2 ea like as above solid fig.

- **Model Definition :**

SCP-20,40,80 & 160.

Where, S : SAM IL
CP : Condensate Pot
20,40,80 & 160 : Pipe Schedule.





ENGINEERING DATA - 6

www.samilind.co.kr

www.samilind.co.kr

www.samilind.co.kr

KS & JIS PIPE DIMENSIONS

Nominal Pipe Size		O•D	SGP	STAINLESS STEEL							CARBON STEEL									
[A]	[B]			5S	10S	20S	40	80	120	160	10	20	30	40	60	80	100	120	140	160
6	1/8	10.5	6.5	8.5	8.1	7.5	7.1	5.7						7.1	6.1	5.7				
8	1/4	13.8	9.2	11.4	10.5	9.8	9.4	7.8						9.4	9.0	7.8				
10	3/8	17.3	12.7	14.9	14.0	13.3	12.7	10.9						12.7	11.7	10.9				
15	1/2	21.7	16.1	18.4	17.5	16.7	16.1	14.3		12.3				16.1	15.3	14.3				12.3
20	3/4	27.2	21.6	23.9	23.0	22.2	21.4	19.4		16.2				21.4	20.4	19.4				16.2
25	1	34.0	27.6	30.7	28.4	28.0	27.2	25.0		21.2				27.2	26.2	25.0				21.2
32	1 ¼	42.7	35.7	39.4	37.1	36.7	35.5	32.9		29.9				35.5	33.7	32.9				29.9
40	1 ½	48.6	41.6	45.3	43.0	42.6	41.2	38.4		34.4				41.2	39.6	38.4				31.2
50	2	60.5	52.9	57.2	54.9	53.5	52.7	49.5		43.1		54.1		52.7	50.7	49.5				43.1
65	2 ½	76.3	67.9	72.1	70.3	69.3	65.9	62.3		57.3		67.3		65.9	64.3	62.3				57.3
80	3	89.1	80.7	84.9	83.1	81.1	78.1	73.9		66.9		80.1		78.1	75.9	73.9				66.9
90	3 ½	101.6	93.2	97.4	95.6	93.6	90.2	85.4		76.2		92.6		90.2	87.6	85.4				76.2
100	4	114.3	105.3	110.1	108.3	106.3	102.3	97.1	92.1	87.3		104.5		102.3	100.1	97.1		92.1		87.3
125	5	139.8	130.8	134.2	133.0	129.8	126.6	120.8	114.4	108.0		129.6		126.6	123.6	120.8		114.4		108.0
150	6	165.2	155.2	159.6	158.4	155.2	151.0	143.2	136.6	128.8		154.2		151.0	146.6	143.2		136.6		128.8
175	7	190.7	180.1																	
200	8	216.3	204.7	210.7	208.3	203.3	199.9	190.9	179.9	170.3		203.5	202.3	199.9	195.7	190.9	186.1	179.9	175.1	170.3
225	9	241.6	229.2																	
250	10	267.4	254.2	260.6	259.4	254.4	248.8	237.2	224.6	210.2		254.6	251.8	248.8	242.0	237.2	231.0	224.6	216.6	210.2
300	12	318.5	304.7	310.5	309.5	305.5	297.9	283.7	267.7	251.9		305.7	301.7	297.9	289.9	283.7	275.7	267.7	261.3	251.9
350	14	355.6	339.8								342.8	339.8	336.6	333.4	325.4	317.6	308.0	300.0	292.0	284.2
400	16	406.4	390.6								393.6	390.6	387.4	381.0	373.0	363.6	354.0	344.6	333.4	325.4
450	18	457.2	441.4								444.4	441.4	435.0	428.6	419.2	409.6	398.4	387.4	377.8	366.8
500	20	508.0	492.2								495.2	489.0	482.6	477.8	466.8	455.6	443.0	431.8	419.2	408.0

ASTM PIPE DIMENSIONS

COLOR [■] filled Cell : these dimensions do not conform to ANSI/ASME B36.10M.

Nominal Pipe Size		O•D	STAINLESS STEEL [ANSI/ASME B36.19M-1985]				CARBON STEEL [ANSI/ASME B36.10M-1996]													
NPS	DN		5S	10S	40S	80S	STD	5	10	20	30	40	60	80	100	120	140	160	XS	XXS
1/2	15	21.34	18.04	17.12	15.80	13.87	15.80	18.04	17.12		16.52	15.80		13.87				11.79	13.87	6.40
3/4	20	26.67	23.37	22.45	20.93	18.85	20.93	23.37	22.45		21.85	20.93		18.85				15.54	18.85	11.02
1	25	33.40	30.10	27.86	26.64	24.31	26.64	30.10	27.86		27.60	26.64		24.31				20.70	24.31	15.21
1 ¼	32	42.16	38.86	36.62	35.05	32.46	35.05	38.86	36.62		36.22	35.05		32.46				29.46	32.46	22.76
1 ½	40	48.26	44.96	42.72	40.89	38.10	40.89	44.96	42.72		41.91	40.89		38.10				33.99	38.10	27.94
2	50	60.33	57.03	54.79	52.50	49.25	52.50	57.03	54.79		53.98	52.50		49.25				42.85	49.25	38.18
2 ½	65	73.03	68.81	66.93	62.71	59.0	62.71	68.81	66.93		63.48	62.71		59.00				53.98	59.00	44.98
3	80	88.90	84.68	82.80	77.93	73.66	77.93	84.68	82.80		79.35	77.93		73.66				66.65	73.66	58.42
3 ½		101.6	97.38	95.50	90.12	85.45	90.12	97.38	95.50		92.05	90.12		85.45					85.45	
4	100	114.3	110.1	108.2	102.3	97.18	102.3	110.1	108.2		104.7	102.3		97.18		92.05		87.33	97.18	80.06
5	125	141.3	135.8	134.5	128.2	122.3	128.2	135.8	134.5			128.2		122.3		115.9		109.6	122.3	103.2
6	150	168.3	162.8	161.5	154.1	146.3	154.1	162.8	161.5			154.1		146.4		139.8		131.8	146.4	124.4
8	200	219.1	213.6	211.6	202.7	193.7	202.7	213.6	211.6	206.4	205.0	202.7	198.5	193.7	188.9	182.5	177.8	173.1	193.7	174.6
10	250	273.1	266.3	264.7	254.5	247.7	254.5	266.3	264.7	260.4	257.5	254.5	247.7	242.9	236.5	230.2	222.3	215.9	247.7	222.3
12	300	323.9	316.0	314.8	304.8	298.5	304.8	316.0	314.8	311.2	307.1	303.2	295.3	288.9	281.0	273.1	266.7	257.2	298.5	273.1
14	350	355.6	347.7	346.0			336.6	347.7	342.9	339.8	336.6	333.3	325.4	317.5	307.9	300.0	292.1	284.2	330.2	
16	400	406.4	398.0	396.8			387.4	398.0	393.7	390.6	387.4	381.0	373.1	363.5	354.0	344.5	333.3	325.4	381.0	
18	450	457.2	448.8	447.6			438.2	448.8	444.5	441.4	434.9	428.7	419.1	409.5	398.5	387.4	377.9	366.7	431.8	
20	500	508.0	498.4	496.9			489.0	498.4	495.3	489.0	482.6	477.8	466.8	455.6	442.9	431.8	419.1	408.0	482.6	
22		558.8	549.2	547.7			539.8	549.2	546.1	539.8	533.4		514.4	501.7	489.0	476.3	463.6	450.9	533.4	
24	600	609.6	598.5	596.9			590.6	598.5	596.9	590.6	581.1	574.6	560.4	547.7	531.8	517.6	504.9	490.5	584.2	
26		660.4					641.4		644.6	635.0									635.0	
28	700	711.2					692.2		695.4	685.8	679.5								685.8	
30		762.0	749.3	746.2			743.0	749.3	746.2	736.6	730.3								736.6	
32	800	812.8					793.8		797.0	787.4	781.1	777.8							787.4	
34		863.6					844.6		847.8	838.2	831.9	828.6							838.2	

SAMIL SAMIL SAMIL SAMIL SAMIL SAMIL SAMIL SAMIL SAMIL SAMIL SAMIL
WWW.SAMILWWW.SAMILWWW.SAMILWWW.SAMILWWW.SAMILWWW.SAMILWWW.SAMILWWW.SAMILWWW.SAMILWWW.SAMILWWW.SA

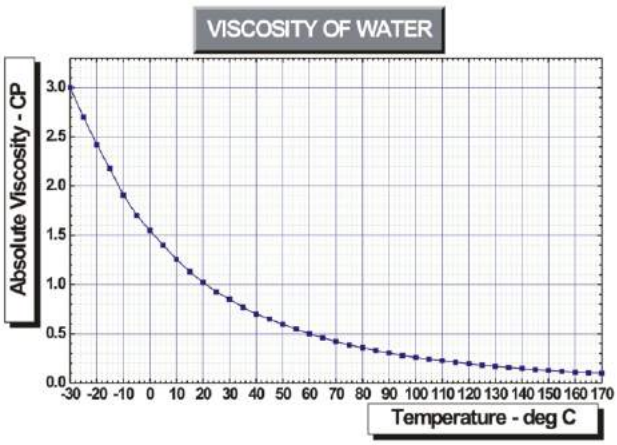

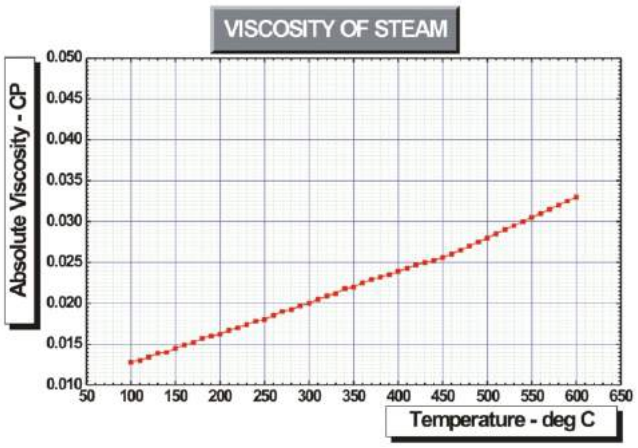

Viscosity of Liquids

Temp[°C]	Centipoise	Temp[°C]	Centipoise	Temp[°C]	Centipoise
Acetic Acid		**Methanol**		**Glycerin**	
15	1.31	-30	1.22	0	12110
18	1.30	0	0.82	6.1	6260
25	1.155	15	0.623	15	2330
30	1.04	20	0.597	20	1490
41	1.00	25	0.547	25	954
100	0.43	30	0.510	30	629
Acetone		**Heptane**		**Sodium Hydroxide**	
-10	0.450	0	0.524	21.1	100
0	0.399	17.2	0.461	37.8	40
15	0.337	20	0.409	48.9	25
25	0.316	25	0.386	60	15
30	0.3	40	0.341	71.1	9.5
Ammonia		**Hexane**		93.3	3.7
-69	0.475	0	0.401	104.4	2.4
-50	0.317	20	0.326	121.1	1.4
-40	0.276	25	0.294	**Sodium Liquid**	
-33.3	0.255	40	0.271	-17.8	2.4
Ammonia		**Hexane**		-3.3	1.3
-69	0.475	0	0.401	4.4	1.2
-50	0.317	20	0.326	15.6	1.1
-40	0.276	25	0.294	37.8	1.0
-33.3	0.255	40	0.271	60	0.85
				70	0.8
				80	0.75
				100	0.67

Viscosity of Gases

Temp[°C]	Centipoise	Temp[°C]	Centipoise	Temp[°C]	Centipoise
Ammonia		**Hydrogen**		**Oxygen**	
0	0.0092	-100	0.0062	0	0.0189
20	0.01	-70	0.007	19	0.0202
40	0.0106	-50	0.0073	30	0.0205
60	0.0115	-20	0.0071	50	0.0217
80	0.012	0	0.0084	70	0.0225
100	0.0128	20	0.0085	100	0.0238
120	0.0135	50	0.0094	110	0.0246
140	0.0141	70	0.0097	140	0.0255
160	0.015	100	0.0103	160	0.0265
180	0.0155	130	0.0109	180	0.0272
200	0.0162	150	0.0112	200	0.028
220	0.017	170	0.0115	220	0.029
240	0.0178	200	0.012	250	0.03
260	0.0182	220	0.0123	270	0.031
280	0.019	250	0.0128	300	0.032
Butene		**Benzene**		**Propane**	
0	0.0077	0	0.0067	0	0.0075
30	0.0086	30	0.0077	30	0.008
50	0.0091	50	0.0081	50	0.0085
70	0.0095	70	0.0086	70	0.0088
90	0.01	90	0.00902	90	0.0094
110	0.0105	110	0.0096	110	0.0097
130	0.011	130	0.0102	130	0.0102
150	0.0115	150	0.0107	150	0.0107
170	0.012	170	0.0111	170	0.0114

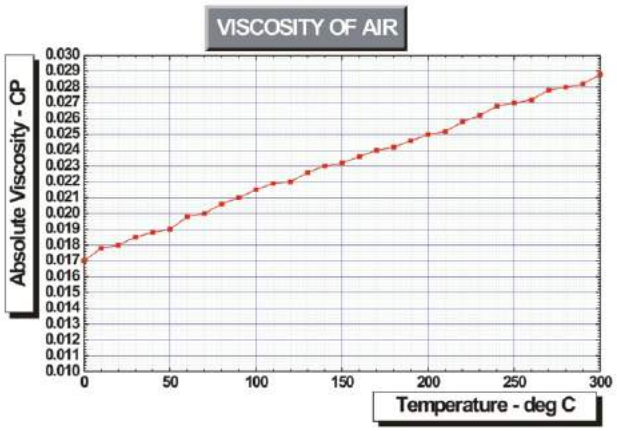

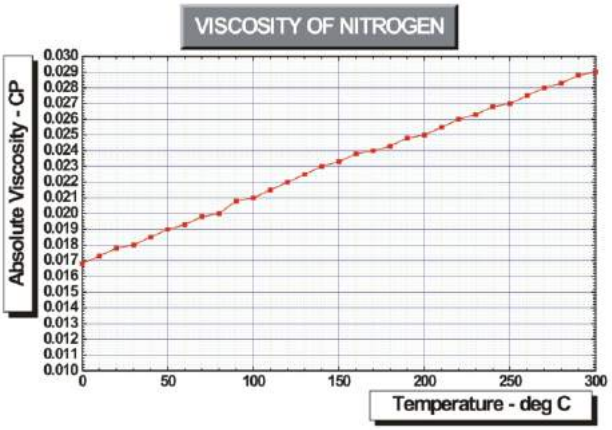

SAMIL SAMIL SAMIL SAMIL SAMIL SAMIL SAMIL SAMIL SAMIL SAMIL SAMIL SAMIL
WWW.SAMILWW.SAMILWW.SAMILWW.SAMILWW.SAMILWW.SAMILWW.SAMILWW.SAMILWW.SAMILWW.SAMILWW.SAMILWW

Compound	Formula	Molecular Weight [M]	Boiling Point °F 14.696psi., Abs	Critical Constants		Gas Density, 60°F 14.696psi., Abs		Compressibility Factor, Z, at 60°F 14.696psi	K equal to Cp / Cv
				Pressure [Psi.,abs]	Temperature [°F]	Specific Gravity Air = 1	Ft^3 per lb		
Methane	CH_4	16.042	-258.68	673.1	-115.78	0.5538	23.66	0.9981	1.31
Ethane	C_2H_6	30.068	-127.53	709.8	90.32	1.038	12.62	0.9916	1.19
Propane	C_3H_8	44.094	-43.73	617.4	206.26	1.522	8.606	0.9820	1.13
Ammonia	NH_3	17.032	-28.0	1636	270.1	0.588	22.28	-	1.31
Air	N_2O_2	28.966	-317.6	547	-221.3	1.000	13.10	0.9996	1.4
Hydrogen	H_2	2.016	-422.9	188.1	-399.8	0.0696	188.2	1.0006	1.41
Oxygen	O_2	32.000	-297.4	736	-181.1	1.105	11.86	0.999	1.4
Nitrogen	N_2	28.016	-320.4	492	-232.6	0.9672	13.55	0.9997	1.4
Chlorine	Cl_2	70.914	-30.3	1120	291	2.448	5.351	0.984	1.31
Water[Steam]	H_2O	18.016	212.0	3208	705.6	0.622	21.06	-	1.33
Hydrogen Chloride	HCl	36.465	-121	1198	124.5	1.259	10.41	0.993	1.40
Methyl Alcohol	CH_4O	32.042	148.1	1154	464.0	1.106	11.84	-	-
Ethyl Alcohol	C_2H_5OH	46.069	173.3	926	469	1.590	8.237	-	-
Carbon Monoxide	CO	28.010	-313.6	507	-220	0.9670	13.55	0.9995	1.4
Carbon Dioxide	CO_2	44.010	-109.3	1071	87.8	1.519	8.623	0.9943	1.29
Hydrogen Sulfide	H_2S	34.076	-75.3	1306	212.7	1.176	11.14	0.9903	1.32
Sulfur Dioxide	SO_2	64.060	14.0	1143	315.5	2.212	5.924	0.977	1.29
Sulfur Trioxide	SO_3	80.06	-	-	-	2.773	-	-	-
Iso-Butane	C_4H_{10}	58.120	10.89	529.1	274.96	2.006	6.529	0.9699	1.097
N-Butane	C_4H_{10}	58.120	31.10	550.7	305.62	2.006	6.529	0.9667	1.096
Iso-Pentane	C_5H_{12}	72.146	82.13	483	369.0	2.491	5.260	0.9482	1.077
N-Pentane	C_5H_{12}	72.146	96.93	489.5	385.5	2.491	5.260	0.9435	1.076
N-Hexane	C_6H_{14}	86.172	155.73	440.0	454.1	2.975	4.404	-	1.064
N-Heptane	C_7H_{16}	100.198	209.17	396.8	512.62	3.459	3.787	-	1.054
Iso-Octane	C_8H_{18}	114.224	210.63	374.7	520.1	3.943	3.322	-	-
N-Octane	C_8H_{18}	114.224	258.20	362.1	563.7	3.943	3.322	-	1.047
N-Nonane	C_9H_{20}	128.250	303.44	332	610.5	4.428	2.959	-	-
N-Decane	$C_{10}H_{22}$	142.276	345.42	304	651.9	4.912	2.667	-	-
Ethene[Ethylene]	C_2H_4	28.052	-154.68	742.1	49.82	0.9684	13.53	0.9940	1.25
Ethyne[Acetylene]	C_2H_2	26.036	-119	905	97.4	0.8988	14.58	0.9925	1.24
Propene[Propylene]	C_3H_6	42.078	-53.86	667	197.4	1.453	9.019	0.9839	1.16
Benzene	C_6H_6	78.108	176.18	714	552.0	2.697	4.859	0.929	1.12
Toluene	C_7H_8	92.134	231.12	590	605.5	3.181	4.119	0.903	1.09
Ethyl Benzene	C_8H_{10}	106.160	277.13	540	651.2	3.665	3.575	-	-
Styrene[Phenyl Ethylene]	C_8H_8	104.144	293.25	580	706.0	3.595	3.644	-	-
Propene[Propylene]	C_3H_6	42.078	-53.86	667	197.4	1.453	9.019	0.9839	1.16
Argon	Ar	39.944	-302.26	-	-188.14	1.38	-	0.999	1.66
Nitrogen Monoxide	NO	30.01	-241.06	-	-135.4	1.04	-	0.999	1.39
Carbon Disulfide	CS_2	76.142	115.34	-	533.84	2.64	-	-	-
Helium	He	4.0026	514.22	-	-	0.138	-	1	1.66
Methyl Chloride	CH_3Cl	50.49	-11.38	-	-	1.74	-	0.978	1.28
Dimethyl Ether	C_2H_6O	46.07	-10.66	-	260.42	1.59	-	0.983	1.14
Ethyl Fluoride	C_2H_5F	48.06	-25.6	-	215.96	1.66	-	-	-
Methyl Fluoride	CH_3F	34.03	-105.52	-	112.28	1.17	-	0.989	-
1-Butene[Butylene]	C_4H_8	56.103	20.73	583	295.6	1.937	6.764	0.9694	1.07
Trans-2 Butene	C_4H_8	56.103	33.58	600	324.3	1.937	6.764	0.9654	-
Cis-2 Butene	C_4H_8	56.103	38.70	600	311.9	1.937	6.764	0.9653	-
[Mono]-Methylamine	CH_3NH_2	31.06	-	-	-	-	-	-	-
Freon-11[F-11]	CCl_3F_3	137.4	76.82	-	-	-	-	-	1.13
Freon-12[F-12]	CCl_2F_2	120.9	-20.56	-	-	-	-	-	1.14
Dichloroethylene[Dieline]	$C_2H_2Cl_2$	96.94	88.808	-	-	1.2132	-	-	1.14

SAMIL SAMIL SAMIL SAMIL SAMIL SAMIL SAMIL SAMIL SAMIL SAMIL SAMIL
WWW.SAMILWWW.SAMILWWW.SAMILW

◉: Resistive
○: Limited Resistive
×: Not Resistive
●: Resistive up to Indicated Temp.

CHEMICALS	CONCENTRATION	METALS													NON-METALLIC					
		Carbon Steel	304SS	316SS	High Silicon Steel	Monel	Hastelloy-B	Hastelloy-C	Carpenter-2C	Titanium	Nickel	Copper	Copper Alloy	Tantalum	Hard PVC	Phenol Resin	Epoxy Resin	Polyethylene	Tetrafluorid Resin	Trifluride Resin
Sulfurous Acid [SO_2]		×		○	×	×		◉	◉	○	×	×	×	◉	◉	◉	◉	◉	◉	◉	◉
Ammonia [NH_3]		○	◉		○		◉	◉	◉			×	×	×	◉	×	◉	◉	◉	◉
Hydrochloric Acid [HCl]	0~5%	×	×	×	×	×	●70	●20	×	●70	×	×	×	◉	◉	◉	◉	◉	◉	◉	◉
	5~20	×	×	×	×	×	●70	●20	×	×	×	×	×	◉	◉	◉	◉	◉	◉	◉	◉
	20<	×	×	×	×	×	●70	×	×	×	×	×	×	◉	◉	◉	◉	◉	◉	◉	◉
Chlorine [Cl_2]	Dry	◉	◉	◉	◉		◉	◉						◉	◉	×	×	×	◉	○
	Wet	×	×	×	×		◉	◉						◉	×	×	×	×	×	○
Sea Water		×	○			◉	◉	◉		◉		◉	◉		◉			◉	◉	◉
Caustic Soda [NaOH]	0~10%	×	●100	●100	×	◉	◉	◉		◉	◉	×	×	×		×	×	◉	◉	◉
	10~30	×	●100	●100	×	◉	◉	◉		◉	◉	×	×	×	◉	×	×	◉	◉	◉
	30~50	×	●100	●100	×	◉	◉	◉		●30	◉	×	×	×	◉	×	×	◉	◉	◉
	50~70	×	●100	●100	×	◉					◉	×	×	×		×	×	◉	◉	◉
	70<	×	×	×	×	×					◉	●180	◉	×		×	×	◉	◉	◉
Acetic Acid [CH_3COOH] M.W=60.052	<75%	×	×	×	◉	◉	◉	◉			◉	◉		◉	◉	◉	◉	●65	◉	◉
	75%<	×	×	×	◉	◉	◉	◉			◉	◉		◉	◉	◉	◉		◉	◉
Nitric Acid [HNO_3] M.W=63.02	0~20%	×	◉	◉	◉	×						×	×	◉		×	×	◉	◉	◉
	20~70	×	◉	◉	◉	×						×	×	◉	×	×	×		◉	◉
	70~95	×	●30	●30	◉	×						×	×	◉	×	×	×		◉	◉
	95<	×			◉	×						×	×	◉	×	×	×		◉	◉
Bromine [Br_2]		×	×	×		×	◉	◉				×		◉				×		◉
Naphtha		◉	◉	◉		◉	◉												◉	◉
Fluoric Acid [HF]	0~40%	×	×	×	×	◉	◉	◉		×		◉		×	◉			●60	◉	◉
	40~50	×	×	×	×	●140	◉	◉		×		◉		×					◉	◉
	60~80	×	×	×	×		◉	◉		×		×	×	×					◉	◉
	80<	×	×	×	×		◉	◉		×		×	×	×					◉	◉
Phosphoric Acid [H_3PO_4]	0~5%	×	×	×	◉	×					×	×	×	◉	◉	◉	◉	◉	◉	◉
	5~25	×	×	×	◉	×					×	×	×	◉	◉	◉	◉	◉	◉	◉
	25~50	×	×	×	◉	×					×	×	×	◉	◉	◉	◉	◉	◉	◉
	50~85	×	×	×	◉	×					×	×	×	◉	×	◉	◉	●45	◉	◉
Surfuric Acid [H_2SO_4]	0~10%	×	×	×	○	×				×	×	×	×	◉	◉	◉	◉	◉	◉	◉
	10~60	×	×	×	○	×				×	×	×	×	◉	◉	◉	◉	◉	◉	◉
	60~75	×	×	×	◉	×				×	×	×	×	◉	○			◉	◉	◉
	75~95	×	×	×	◉	×				×	×	×	×	◉	×			◉	◉	◉
	95<	×	×	×	◉	×				×	×	×	×	◉	×			◉	◉	◉
Hydrogen Sulfide [H_2S]		×	○	○	◉			◉							◉	◉	◉	○	◉	○

Note : 1. Note that The materials, Nonmetallic have their own critical temperature & pressure.

SAMIL SAMIL SAMIL SAMIL SAMIL SAMIL SAMIL SAMIL SAMIL SAMIL SAMIL SAMIL
WWW.SAMILWW.SAMILWW.SAMILWW.SAMILWW.SAMILWW.SAMILWW.SAMILWW.SAMILWW.SAMILWW.SAMILWW.SAMILWW

TEMPERATURE

t [°C] =	t[°F] - 32 ÷ 1.8
t [°F] =	1.8 x t[°C] + 32
T [°K] =	t[°C] + 273.15
T [°R] =	t[°F] + 459.67
=	1.8 x T[°K]

RADIAN to DEGREE

1 Radian = 180÷π[= 57.29578 Deg.]

-Examples

1. Change 87° 26' 34" to radian
   Solution : From formula above ;

87° = 1.5184364 Rad.
26' = 0.0075631 Rad.
34" = 0.0001648 Rad.

87° 26' 34" = 1.5261643 Rad.

2. Change 1.5262 radian to degree
   Solution : From formula above ;

1 rad	= 57° 17' 44.8"
0.5	= 28° 38' 52.4"
0.02	= 1° 8' 45.3"
0.006	= 0° 20' 37.6"
0.0002	= 0° 0' 41.3"
1.5262	= 86° 83' 221.4"
	= 87° 26' 41.4"

VISCOSITY

KENEMATIC VISCOSITY[SI UNIT]

$$[mm^2/s] = 1000 \times \frac{\text{Viscosity[mPa • s]}}{\text{Density[kgf/m}^3\text{]}}$$

KENEMATIC VISCOSITY[cSt UNIT]

$$[cSt] = 1000 \times \frac{\text{Viscosity[cP]}}{\text{Density[kgf/m}^3\text{]}}$$

FLOW

From Units	To m^3 / hr	To Nm^3 / hr [at 0°C,101kpa] [Gas]
m^3 / h	----------	x ◘
Gas, Sm^3 / h [at 15°C 1013 mbar]	x ⊡	x 288 / 273
Kg / h	÷ S.G x 0.001	x 22.41 ÷ M.W ÷ Z
Kℓ / h	----------	x ◘
t / h	÷ S.G	x 1000 x 22.41 ÷ M.W ÷ Z
ℓ / h	x 0.001	x 0.001 x ◘
ℓ / m	x 0.001 x 60	x 0.001 x 60 x ◘
t / m	÷ S.G x 60	x 60 x 1000 x 22.41 ÷ M.W ÷ Z
Lb / h	x 0.4536 ÷ SG x 0.001	x 0.45359 x 22.41 ÷ M.W ÷ Z
ft^3 / h	x $[0.3048]^3$	x $[0.3048]^3$ x ◘
SCFH[Nft^3/h]	x $[0.3048]^3$ x ⊡	x $[0.3048]^3$ x 273 x 288
bbl / m	x 0.159	x 0.159 x ◘
bbl / m	x 0.159 x 60	x 0.159 x 60 x ◘
GPM	x 3.785412 x 0.001 x 60	x 3.785412 x 0.001 x 60 x ◘
CFM	x $[0.3048]^3$ x 60	x $[0.3048]^3$ x 60 x ◘
SCFM	x $[0.3048]^3$ x 60 x ⊡	x $[0.3048]^3$ x 60 x 273 x 288
Nm^3 / h [at 0°C 1013 mbar]	x T_1 x 1.0332 ÷ [P_1 x 273]	----------

◘ = P_1 x 273 ÷ [1.0332 x T_1]
⊡ = 1.0332 x T_1 ÷ [P_1 x 288]
P_1 = Kg_f / cm^2 A , Pressure at Valve Inlet.
T_1 = °K, Fluid Temperature at Valve Inlet.

S.G = Specific Gravity
M.W = Molecular Weight
Z = Compressibility Factor

1 m^3 / s = 35.315 ft^3 / s
1 ft^3 / s = 2.8317 x 10^{-2} m^3 / s
1 m^3 / s = 264.17 gal / s = 6.29 bbl / s
ft^3 = 0.028317 m^3 = 7.4805 gal
gal = 0.0017854 m^3 = 0.133685 ft^3
bbl = 0.1590 m^3 = 5.615 ft^3 = 42 gal
gpm = 0.2271 m^3 / h = 8.022 ft^3 / h = 500 [S.G] [lb / hr] = 34.29BSPD
= 1.42857 bbl / h
m^3 / h = 4.402 gpm = 0.5885 cfm = 6.29 bbl / h
BSPD = 14.574 [S.G] [lb / h] = 6.61 [S.G] [kg / h] = 1.75 gal / h
= 0.0681 $[S.G]^{-1}$ [BPSD]

VISCOSITY

Pa • sec N • s / m^2 kg / m • s	P[Poise] g / cm • s	CP[Centi Poise] mPa • s Kg / m • s	kg / m • h	lb / ft • s	lb / ft • h
1 0.1 0.001	10 1 0.01	1000 100 1	3600 360 3.6	0.671969 0.0671969 6.71969 x 10^{-4}	2419.09 241.909 2.41909
2.77778 x 10^{-4} 1.48816 4.13379 x 10^{-4}	2.77778 x 10^{-3} 14.8816 4.13379 x 10^{-3}	0.277778 1.48816 x 10^3 0.413379	1 5.35738 x 10^3 1.48816	1.86658 x 10^{-4} 1 2.77778 x 10^{-4}	0.671969 3600 1

1Pa • s= 1N • s/m^2= 1kg/m • s 1P= 1g/cm • s= 0.1 Pa • s
1cP= 0.01P= 1mPa • s

KINEMATIC VISCOSITY

m^2 / s	St[stokes] cm^2 / s	m^2 / h	ft^2 / s	ft^2 / h
1 10^{-4} 2.77778 x 10^{-4} 0.0929030 2.58064 x 10^{-5}	10^4 1 2.77778 929.030 0.258064	3600 0.36 1 334.451 0.0929030	10.7639 1.07639 x 10^{-3} 2.98998 x 10^{-3} 1 2.77778 x 10^{-4}	3.87501 x 10^4 3.87501 10.7639 3600 1

1St= 1cm^2 / s 1cSt= 0.01 St= 1mm^2/s

SAMIL SAMIL SAMIL SAMIL SAMIL SAMIL SAMIL SAMIL SAMIL SAMIL SAMIL
WWW.SAMILWW.SAMILWW.SAMIL

DENSITY

1 g / cm^3 = 62.428 lb_m / ft^3
1 lb_m / ft^3 = 0.0160185 g / m^3

1 kg / m^3 = 0.062428 lb_m / ft^3
1 lb_m / ft^3 = 16.0185 kg / m^3
1 lb / in^3 = 27.6805 g /cc
1 g / cc = 0.001 g / mm^3
1 lb / ft^3 = 1728 lb / in^3
1 kg / m^3 = 1.0E-06 g / mm^3

PRESSURE

Pa	Bar	kg_f / cm^2	Atm	mmH_2O	mmHg or Torr
1	1×10^{-5}	1.01972×10^{-5}	9.86923×10^{-6}	1.01972×10^{-1}	7.50062×10^{-3}
1×10^{5}	1	1.01972	9.86923×10^{-1}	1.01972×10^{4}	7.50062×10^{2}
9.80665×10^{4}	9.80665×10^{-1}	1	9.67841×10^{-1}	1.0000×10^{4}	7.35559×10^{2}
1.01325×10^{5}	1.01325	1.03323	1	1.03323×10^{4}	7.60000×10^{2}
9.80665	9.80665×10^{-5}	1.0000×10^{-4}	9.67841×10^{-5}	1	7.35559×10^{-2}
1.33322×10^{2}	1.33322×10^{-3}	1.35951×10^{-3}	1.31579×10^{-3}	1.35951 x 10	1

1 atm = 1.0332 kg_f/cm^2 = 14.70 psi = 29.921 inHg = 1.0132 bar = 1.0133 x 5 N / m^2 = 760 mmHg = 760 Torr

kg / cm^2 = 0.9678 atm = 14.223 psi = 28.961 inHg = 0.980665 bar = 98.0665 kpa

☆1 pa = 1 N / m^2

1 psi = 0.06804 atm = 0.07031 kg / cm^2 = 2.036 inHg = 51.71 mmHg = 0.06805 bar.

THERMAL CONDUCTIVITY

1 Btu/ft °F/hr = 1.488 Kcal/m.hr.°C = 4.134x-3Cal/cm.sec.
1 Kcal/m.hr.°C = 0.6720 Btu/ft.hr.°C = 2.778x-3Cal/cm.sec.

HEAT TRANSFER COEF.

1 Btu/ft^2.hr.°F = 4.882 Kcal/m^2.hr.°C = 5.678x-kw/cm^2 °C
1 Kcal/m^2.hr.°C = 0.2048 Btu/ft^2.hr.°F = 1.163x-kw/cm^2 °C

STD CONDITION

■ Standard Condition : 14.96 Psia, 60°F
■ Normal Condition : 14.696 Psia, 32°F

1 SCF = 0.026791 Nm3 1 SCFD = 0.0011163 Nm3
1 Nm3 = 37.325967 SCF

samilind79@samilind.co.kr

SAMIL SAMIL SAMIL SAMIL SAMIL SAMIL SAMIL SAMIL SAMIL SAMIL SAMIL SAMIL
WWW.SAMILWWW.SAMILWWW.SAMILW

SAMIL INDUSTRY CO.,LTD.

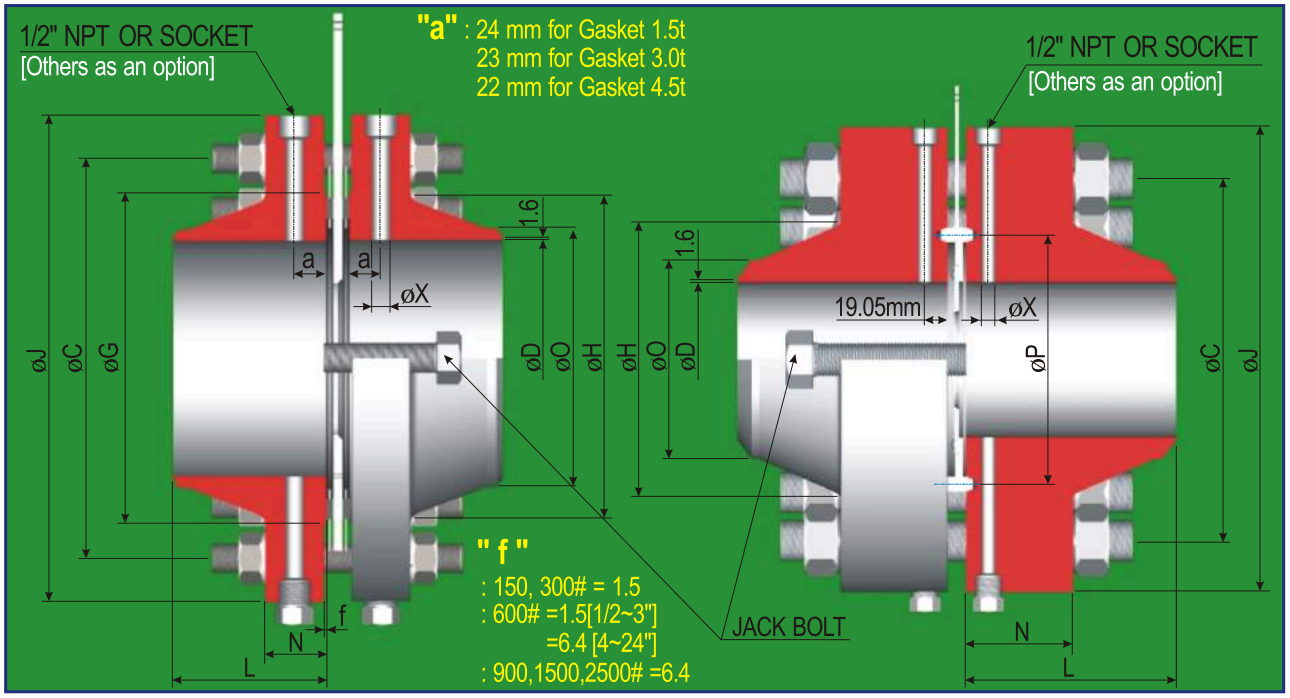

ORIFICE FLANGE DIMENSIONS---------ANSI 16.36 FORGED 150# WN-RF

FOR SIZE 26 IN. AND ABOVE, COMPLIED WITH ASME B16.47 SERIES A[MSS SP44], UNITS : MM

Nominal Pipe Size [inch]	Out-Side Diameter	Thick -ness	O.D of Raised Face	Length Thru Hub	Diam. at Base of Hub	Diam.of Hub at Bevel	Diam.of Tap Hole	Bolt Circle	Diam. of Bolt Holes	No. of Bolts	Bolt Size & Length	Jack Bolt & Length	O.D of Orifice Plate
	J	N	G	L	H	O	X	C					
1/2	89	38.1	35.1	74.7	30.2	21.3	6.4	60.5	15.7	4	1/2"x140	1/2"x75	48
3/4	98.6	38.1	42.9	77.7	38.1	26.7	6.4	69.9	15.7	4	1/2"x140	1/2"x75	57
1	108	38.1	50.8	79.5	49.3	33.5	6.4	79.2	15.7	4	1/2"x140	1/2"x75	66.5
1 1/2	127	38.1	73.2	82.6	65	48.3	6.4	98.6	15.7	4	1/2"x140	1/2"x75	86
2	152.4	38.1	91.9	82.6	77.7	60.5	6.4	120.7	19.1	4	5/8"x150	5/8"x75	105
2 1/2	177.8	38.1	104.6	85.6	90.4	73.2	6.4	139.7	19.1	4	5/8"x150	5/8"x75	124
3	190.5	38.1	127	85.6	108	88.9	9.5	152.4	19.1	4	5/8"x150	5/8"x75	136.5
4	228.6	38.1	157.2	90.4	134.9	114.3	12.7	190.5	19.1	8	5/8"x150	5/8"x75	174.5
6	279.4	38.1	215.9	100.1	192.1	168.4	12.7	241.3	22.4	8	3/4"x165	3/4"x75	222
8	342.9	38.1	269.7	111.3	246.1	219.2	12.7	298.5	22.4	8	3/4"x165	3/4"x75	279.5
10	406.4	38.1	323.9	109.5	304.8	273.1	12.7	362	25.4	12	7/8"x180	7/8"x115	340
12	482.6	38.1	381	120.7	365.3	323.9	12.7	431.8	25.4	12	7/8"x180	7/8"x115	409.5
14	533.4	38.1	412.8	127	400.1	355.6	12.7	476.3	28.4	12	1" x 195	1" x 115	451
16	596.9	38.1	469.9	127	457.2	406.4	12.7	539.8	28.4	16	1" x 195	1" x 115	514.5
18	635.0	39.6	533.4	139.7	505	457.2	12.7	577.9	31.8	16	1 1/8"x210	1" x 115	549.5
20	698.5	42.9	584.2	144.5	558.8	508	12.7	635	31.8	20	1 1/8"x220	1" x 115	606.5
24	812.8	47.8	692.2	152.4	663.4	609.6	12.7	749.3	35.1	20	1 1/4"x240	1" x 115	717.5

ORIFICE FLANGE DIMENSIONS---ANSI 16.36 FORGED 300 & 600# WN-RF

FOR SIZE 26 IN. AND ABOVE, COMPLIED WITH ASME B16.47 SERIES A[MSS SP44], UNITS : MM

Nominal Pipe Size [inch]	Out-Side Diameter	Thick -ness	O.D of Raised Face	Length Thru Hub	Diam. at Base of Hub	Diam.of Hub at Bevel	Diam.of Tap Hole	Bolt Circle	Diam. of Bolt Holes	No. of Bolts	Bolt Size & Length	Jack Bolt & Length	O.D of Orifice Plate
	J	N	G	L	H	O	X	C					
1/2	95.3	38.1	35.1	76.2	38.1	21.3	6.4	66.5	15.7	4	1/2"x140	1/2"x75	54
3/4	117.3	38.1	42.9	79.5	47.8	26.7	6.4	82.6	17.5	4	5/8"x150	1/2"x75	66.5
1	124	38.1	50.8	82.6	53.8	33.5	6.4	88.9	17.5	4	5/8"x150	5/8"x75	73
1 1/2	155.4	38.1	73.2	85.9	69.9	48.3	6.4	114.3	20.6	4	3/4"x165	5/8"x75	95
2	165.1	38.1	91.9	85.9	84.1	60.5	6.4	127	17.5	8	5/8"x150	5/8"x75	111
2 1/2	190.5	38.1	104.6	88.9	100.1	73.2	6.4	149.4	20.6	8	3/4"x165	5/8"x75	130.5
3	209.6	38.1	127	88.9	117.3	88.9	9.5	168.1	20.6	8	3/4"x165	3/4"x75	149
4	254	38.1	157.2	91.9	146.1	114.3	12.7	200.2	20.6	8	3/4"x165	3/4"x75	181
6	317.5	38.1	215.9	100.1	206.2	168.4	12.7	269.7	22.4	12	3/4"x165	3/4"x75	250.5
8	381	41.2	269.7	111.3	260.4	219.2	12.7	330.2	25.4	12	7/8"x185	3/4"x75	308
10	444.5	47.8	323.9	117.3	320.5	273.1	12.7	387.4	28.4	16	1" x 210	1" x 115	362
12	520.7	50.8	381	130	374.7	323.9	12.7	450.9	31.8	16	1 1/8"x230	1" x 115	422.5
14	584.2	53.8	412.8	142.7	425.5	355.6	12.7	514.4	31.8	20	1 1/8"x235	1" x 115	486
16	647.7	57.2	469.9	146.1	482.6	406.4	12.7	571.5	35.1	20	1 1/4"x260	1" x 115	540
18	711.2	60.5	533.4	158.8	533.4	457.2	12.7	628.7	35.1	24	1 1/4"x265	1" x 115	597
20	774.7	63.5	584.2	162.1	587.2	508	12.7	685.8	35.1	24	1 1/4"x270	1" x 115	654
24	914.4	69.9	692.2	168.1	701.5	609.6	12.7	812.8	41.1	24	1 1/2"x310	1" x 140	774.5

Nominal Pipe Size [inch]	Out-Side Diameter	Thick -ness	O.D of Raised Face	Length Thru Hub	Diam. at Base of Hub	Diam.of Hub at Bevel	Diam.of Tap Hole	Bolt Circle	Diam. of Bolt Holes	No. of Bolts	Bolt Size & Length	Jack Bolt & Length	O.D of Orifice Plate
	J	N	G	L	H	O	X	C					
1/2	95.3	38.1	35.1	76.2	38.1	21.3	6.4	66.5	15.7	4	1/2"x140	1/2"x75	54
3/4	117.3	38.1	42.9	79.5	47.8	26.7	6.4	82.6	17.5	4	5/8"x150	1/2"x75	66.5
1	124	38.1	50.8	82.6	53.8	33.5	6.4	88.9	17.5	4	5/8"x150	5/8"x75	73
1 1/2	155.4	38.1	73.2	85.9	69.9	48.3	6.4	114.3	20.6	4	3/4"x165	3/4"x75	95
2	165.1	38.1	91.9	85.9	84.1	60.5	6.4	127	17.5	8	5/8"x150	5/8"x75	111
2 1/2	190.5	38.1	104.6	88.9	100.1	73.2	6.4	149.4	20.6	8	3/4"x165	3/4"x75	130.5
3	209.6	38.1	127	88.9	117.3	88.9	9.5	168.1	20.6	8	3/4"x165	3/4"x75	149
4	273.1	44.5	157.2	108	152.4	114.3	12.7	216	25.4	8	7/8"x190	3/4"x100	193.5
6	355.6	54.2	215.9	123.7	222.3	168.4	12.7	292.1	28.4	12	1" x 220	1" x 110	266.5
8	419.1	62	269.7	139.8	273.1	219.2	12.7	349.3	31.8	12	1 1/8"x250	1" x 120	320.5
10	508	69.9	323.9	158.8	342.9	273.1	12.7	431.8	35.1	16	1 1/4"x280	1" x 140	400
12	558.8	72.9	381	161.8	400.1	323.9	12.7	489	35.1	20	1 1/4"x285	1" x 140	457
14	603.3	76.3	412.8	171.5	431.8	355.6	12.7	527.1	38.1	20	1 3/8"x305	1" x 150	492
16	685.8	82.6	469.9	184.2	495.3	406.4	12.7	603.3	41.1	20	1 1/2"x335	1" x 155	565
18	743	89	533.4	190.6	546.1	457.2	12.7	654.1	44.5	20	1 5/8"x360	1" x 165	613
20	812.8	95.3	584.2	196.9	609.6	508	12.7	723.9	44.5	24	1 5/8"x375	1" x 180	682.5
24	939.8	108	692.2	209.6	717.6	609.6	12.7	838.2	50.8	24	1 7/8"x425	1" x 195	790.5

SAMIL SAMIL SAMIL SAMIL SAMIL SAMIL SAMIL SAMIL SAMIL SAMIL
WWW.SAMILWW.SAMILWW.SAMILWW.SAMILWW.SAMILWW.SAMILWW.SAMILWW.SAMILWW.SAMILWW.SAMILWW

SAMIL INDUSTRY CO.,LTD.

ORIFICE FLANGE DIMENSIONS—ANSI 16.36 FORGED 900 & 1500# WN-RF

FOR SIZE 26 IN. AND ABOVE, COMPLIED WITH ASME B16.47 SERIES A[MSS SP44], UNITS : MM

Nominal Pipe Size [inch]	Out-Side Diameter	Thick -ness	O.D of Raised Face	Length Thru Hub	Diam. at Base of Hub	Diam.of Hub at Bevel	Diam.of Tap Hole	Bolt Circle	Diam. of Bolt Holes	No. of Bolts	Bolt Size & Length	Jack Bolt & Length	O.D of Orifice Plate
	J	N	G	L	H	O	X	C					
1/2	120.7	44.5	35.1	82.6	38.1	21.3	6.4	82.6	22.4	4	3/4"x175	5/8"x100	63.5
3/4	130	44.5	42.9	89	44.5	26.7	6.4	88.9	22.4	4	3/4"x175	5/8"x100	70
1	149.4	44.5	50.8	89	52.3	33.5	6.4	101.6	25.4	4	7/8"x190	5/8"x100	79.5
1 1/2	177.8	44.5	73.2	95.3	69.9	48.3	6.4	124	28.4	4	1" x 200	5/8"x100	98.5
2	215.9	44.5	91.9	108	104.6	60.5	6.4	165.1	25.4	8	7/8"x190	5/8"x100	143
2 1/2	244.3	47.5	104.6	111	124	73.2	6.4	190.5	28.4	8	1" x 205	5/8"x105	165
3	241.3	44.5	127	108	127	88.9	9.5	190.5	25.4	8	7/8"x190	3/4"x100	168.5
4	292.1	50.9	157.2	120.7	158.8	114.3	12.7	235	31.8	8	1 1/8"x225	3/4"x110	206.5
6	381	62	215.9	146.1	235	168.4	12.7	317.5	31.8	12	1 1/8"x250	1" x 120	289
8	469.9	69.9	269.7	168.5	298.5	219.2	12.7	393.7	38.1	12	1 3/8"x290	1" x 140	359
10	546.1	76.3	323.9	190.6	368.3	273.1	12.7	469.9	38.1	16	1 3/8"x305	1" x 150	435
12	609.6	85.6	381	206.6	419.1	323.9	12.7	533.4	38.1	20	1 3/8"x325	1" x 155	498.5
14	641.4	92.3	412.8	219.3	450.9	355.6	12.7	558.8	41.1	20	1 1/2"x350	1" x 165	520.5
16	704.9	95.3	469.9	222.3	508	406.4	12.7	616	44.5	20	1 5/8"x370	1" x 180	574.5
18	787.4	108	533.4	235	565.2	457.2	12.7	685.8	50.8	20	1 7/8"x425	1" x 195	638
20	857.3	114.4	584.2	254.1	622.3	508	12.7	749.3	53.8	20	2" x 450	1" x 205	698.5
24	1041.4	146.1	692.2	298.5	749.3	609.6	12.7	901.7	66.5	20	2 1/2"x560	1" x 250	838

Nominal Pipe Size [inch]	Out-Side Diameter	Thick -ness	O.D of Raised Face	Length Thru Hub	Diam. at Base of Hub	Diam.of Hub at Bevel	Diam.of Tap Hole	Bolt Circle	Diam. of Bolt Holes	No. of Bolts	Bolt Size & Length	Jack Bolt & Length	O.D of Orifice Plate
	J	N	G	L	H	O	X	C					
1/2	120.7	44.5	35.1	82.6	38.1	21.3	6.4	82.6	22.4	4	3/4"x175	5/8"x100	63.5
3/4	130	44.5	42.9	89	44.5	26.7	6.4	88.9	22.4	4	3/4"x175	5/8"x100	70
1	149.4	44.5	50.8	89	52.3	33.5	6.4	101.6	25.4	4	7/8"x190	5/8"x100	79.5
1 1/2	177.8	44.5	73.2	95.3	69.9	48.3	6.4	124	28.4	4	1" x 200	5/8"x100	98.5
2	215.9	44.5	91.9	108	104.6	60.5	6.4	165.1	25.4	8	7/8"x190	5/8"x100	143
2 1/2	244.3	47.5	104.6	111	124	73.2	6.4	190.5	28.4	8	1" x 205	5/8"x105	165
3	266.7	54.2	127	123.7	133.4	88.9	9.5	203.2	31.8	8	1 1/8"x235	5/8"x115	174.5
4	311.2	60.2	157.2	130.4	162.1	114.3	12.7	241.3	35.1	8	1 1/4"x260	3/4"x125	209.5
6	393.7	89	215.9	177.9	228.6	168.4	12.7	317.5	38.1	12	1 3/8"x330	1" x 160	282.5
8	482.6	98.3	269.7	219.3	292.1	219.2	12.7	393.7	44.5	12	1 5/8"x375	1" x 180	352.5
10	584.2	114.4	323.9	260.4	368.3	273.1	12.7	482.6	50.8	12	1 7/8"x435	1" x 200	435
12	673.1	130.4	381	288.8	450.9	323.9	12.7	571.5	53.8	16	2" x 480	1" x 220	520.5
14	749.3	139.8	412.8	304.9	495.3	355.6	12.7	635.	60.5	16	2 1/4"x525	1" x 230	578
16	825.5	152.5	469.9	317.6	552.5	406.4	12.7	704.9	66.5	16	2 1/2"X580	1" x 255	641.5
18	914.4	168.5	533.4	333.6	596.9	457.2	12.7	774.7	73.2	16	2 3/4"x635	1" x 275	705
20	984.3	184.2	584.2	362	641.4	508	12.7	831.9	79.2	16	3" x 695	1" x 300	755.5
24	1168.4	209.6	692.2	412.8	762	609.6	12.7	990.6	91.9	16	3 1/2"x795	1" x 335	901.5

ORIFICE FLANGE DIMENSIONS---ANSI 16.36 FORGED 600# & 900# RTJ

FOR SIZE 26 IN. AND ABOVE, COMPLIED WITH ASME B16.47 SERIES A[MSS SP44], UNITS : MM

Nominal Pipe Size [inch]	Out-Side Diam.	Thick -ness	Pitch Dia. of Ring & Groove	Length Thru Hub	Diam. at Base of Hub	Diam.of Hub at Bevel	Diam.of Tap Hole	Bolt Circle	Diam. of Bolt Holes	No. of Bolts	Bolt Size & Length	Jack Bolt & Length	Ring No.
	J	N	P	L	H	O	X	C					
1/2	95.3	43.7	34.14	81.8	38.1	21.3	6.4	66.5	15.7	4	1/2"x160	1/2"x90	R11
3/4	117.3	44.5	42.88	85.9	47.8	26.7	6.4	82.6	19.1	4	5/8"x175	1/2"x100	R13
1	124	44.5	50.8	89	53.8	33.5	6.4	88.9	19.1	4	5/8"x175	5/8"x100	R16
1 1/2	155.4	44.5	68.28	92.3	69.9	48.3	6.4	114.3	22.4	4	3/4"x185	3/4"x105	R20
2	165.1	46	82.55	93.8	84.1	60.5	6.4	127	19.1	8	5/8"x180	5/8"x100	R23
2 1/2	190.5	46	101.6	96.8	100.1	73.2	6.4	149.4	22.4	8	3/4"x190	3/4"x110	R26
3	209.6	46	123.83	96.8	117.3	88.9	9.5	168.1	22.4	8	3/4"x190	3/4"x110	R31
4	273.1	46	149.23	109.5	152.4	114.3	12.7	216	25.4	8	7/8"x205	3/4"x115	R37
6	355.6	55.7	211.12	125.3	222.3	168.4	12.7	292.1	28.4	12	1" x 235	1" x 130	R45
8	419.1	63.5	269.88	141.3	273.1	219.2	12.7	349.3	31.8	12	1 1/8"x265	1" x 145	R49
10	508	71.4	323.85	160.3	342.9	273.1	12.7	431.8	35.1	16	1 1/4"x295	1" x 160	R53
12	558.8	74.4	381	163.4	400.1	323.9	12.7	489	35.1	20	1 1/4"x305	1" x 165	R57
14	603.3	77.8	419.1	173	431.8	355.6	12.7	527.1	38.1	20	1 3/8"x320	1" x 175	R61
16	685.8	84.1	469.9	185.7	495.3	406.4	12.7	603.3	41.1	20	1 1/2"x350	1" x 190	R65
18	743	90.5	533.4	192.1	546.1	457.2	12.7	654.1	44.5	20	1 5/8"x375	1" x 205	R69
20	812.8	98.4	584.2	200	609.6	508	12.7	723.9	44.5	24	1 5/8"x395	1" x 210	R73
24	939.8	112.7	692.15	214.3	717.6	609.6	12.7	838.2	50.8	24	1 7/8"x450	1" x 240	R77

Nominal Pipe Size [inch]	Out-Side Diam.	Thick -ness	Pitch Dia. of Ring & Groove	Length Thru Hub	Diam. at Base of Hub	Diam.of Hub at Bevel	Diam.of Tap Hole	Bolt Circle	Diam. of Bolt Holes	No. of Bolts	Bolt Size & Length	Jack Bolt & Length	Ring No.
	J	N	P	L	H	O	X	C					
1/2	120.7	44.5	39.7	82.6	38.1	21.3	6.4	82.6	22.4	4	3/4"x185	5/8"x105	R12
3/4	130	44.5	44.45	89	44.5	26.7	6.4	88.9	22.4	4	3/4"x185	5/8"x105	R14
1	149.4	44.5	50.8	89	52.3	33.5	6.4	101.6	25.4	4	7/8"x200	5/8"x110	R16
1 1/2	177.8	44.5	68.28	95.3	69.9	48.3	6.4	124	28.4	4	1" x 210	5/8"x115	R20
2	215.9	46	95.25	109.5	104.6	60.5	6.4	165.1	25.4	8	7/8"x205	5/8"x115	R24
2 1/2	244.3	49.1	107.95	112.6	124	73.2	6.4	190.5	28.4	8	1" x 225	5/8"x125	R27
3	241.3	46	123.83	109.5	127	88.9	9.5	190.5	25.4	8	7/8"x205	3/4"x115	R31
4	292.1	52.4	149.23	122.2	158.8	114.3	12.7	235	31.8	8	1 1/8"x245	3/4"x135	R37
6	381	63.6	211.12	147.6	235	168.4	12.7	317.5	31.8	12	1 1/8"x265	1" x 145	R45
8	469.9	71.4	269.88	170	298.5	219.2	12.7	393.7	38.1	12	1 3/8"x305	1" x 165	R49
10	546.1	77.8	323.85	192.1	368.3	273.1	12.7	469.9	38.1	16	1 3/8"x320	1" x 175	R53
12	609.6	87.2	381	208.1	419.1	323.9	12.7	533.4	38.1	20	1 3/8"x340	1" x 185	R57
14	641.4	97	419.1	224	450.9	355.6	12.7	558.8	41.1	20	1 1/2"x375	1" x 205	R62
16	704.9	100	469.9	227	508	406.4	12.7	616	44.5	20	1 5/8"x400	1" x 215	R66
18	787.4	114.3	533.4	241.3	565.2	457.2	12.7	685.8	50.8	20	1 7/8"x455	1" x 245	R70
20	857.3	120.7	584.2	260.4	622.3	508	12.7	749.3	53.8	20	2" x 480	1" x 260	R74
24	1041.4	155.6	692.15	308	749.3	609.6	12.7	901.7	66.5	20		1" x 325	R78

SAMIL SAMIL SAMIL SAMIL SAMIL SAMIL SAMIL SAMIL SAMIL SAMIL SAMIL
WWW.SAMILWW.SAMILWW.SAMILWW.SAMILWW.SAMILWW.SAMILWW.SAMILWW.SAMILWW.SAMILWW.SAMILWW

ORIFICE FLANGE DIMENSIONS---ANSI 16.36 FORGED 1500# & 2500# RTJ

FOR SIZE 26 IN. AND ABOVE, COMPLIED WITH ASME B16.47 SERIES A[MSS SP44], UNITS : MM

Nominal Pipe Size [inch]	Out-Side Diam.	Thick -ness	Pitch Dia. of Ring & Groove	Length Thru Hub	Diam. at Base of Hub	Diam.of Hub at Bevel	Diam.of Tap Hole	Bolt Circle	Diam. of Bolt Holes	No. of Bolts	Bolt Size & Length	Jack Bolt & Length	Ring No.
	J	N	P	L	H	O	X	C					
1/2	120.7	44.5	39.7	82.6	38.1	21.3	6.4	82.6	22.4	4	3/4"x185	5/8"x105	R12
3/4	130	44.5	44.45	89	44.5	26.7	6.4	88.9	22.4	4	3/4"x185	5/8"x105	R14
1	149.4	44.5	50.8	89	52.3	33.5	6.4	101.6	25.4	4	7/8"x200	5/8"x110	R16
1 1/2	177.8	44.5	68.28	95.3	69.9	48.3	6.4	124	28.4	4	1" x 210	5/8"x115	R20
2	215.9	46	95.25	109.5	104.6	60.5	6.4	165.1	25.4	8	7/8"x205	5/8"x115	R24
2 1/2	244.3	49.1	107.95	112.6	124	73.2	6.4	190.5	28.4	8	1" x 225	5/8"x125	R27
3	266.7	55.7	136.53	125.3	133.4	88.9	9.5	203.2	31.8	8	1 1/8"x250	5/8"x135	R35
4	311.2	61.8	161.93	131.9	162.1	114.3	12.7	241.3	35.1	8	1 1/4"x275	3/4"x150	R39
6	393.7	92.1	211.12	181	228.6	168.4	12.7	317.5	38.1	12	1 3/8"x350	1" x 185	R46
8	482.6	103.1	269.88	224	292.1	219.2	12.7	393.7	44.5	12	1 5/8"x400	1" x 215	R50
10	584.2	119.1	323.85	265.1	368.3	273.1	12.7	482.6	50.8	12	1 7/8"x460	1" x 245	R54
12	673.1	138.2	381	296.7	450.9	323.9	12.7	571.5	53.8	16	2" x 515	1" x 275	R58
14	749.3	149.3	419.1	314.4	495.3	355.6	12.7	635	60.5	16	2 1/4"x565	1" x 305	R63
16	825.5	163.6	469.9	328.7	552.5	406.4	12.7	704.9	66.5	16	2 1/2"x625	1" x 335	R67
18	914.4	179.6	533.4	344.7	596.9	457.2	12.7	774.7	73.2	16	2 3/4"x685	1" x 365	R71
20	984.3	195.3	584.2	373.1	641.4	508	12.7	831.9	79.2	16	3" x 745	1 1/2"x395	R75
24	1168.4	223.8	692.15	427	762	609.6	12.7	990.6	91.9	16	3 1/2"x855	1 1/2"x450	R79

Nominal Pipe Size [inch]	Out-Side Diam.	Thick -ness	Pitch Dia. of Ring & Groove	Length Thru Hub	Diam. at Base of Hub	Diam.of Hub at Bevel	Diam.of Tap Hole	Bolt Circle	Diam. of Bolt Holes	No. of Bolts	Bolt Size & Length	Jack Bolt & Length	Ring No.
	J	N	P	L	H	O	X	C					
1/2	133.4	44.5	42.88	87.4	42.9	21.3	6.4	88.9	22.4	4	3/4"x185	5/8"x105	R13
3/4	139.7	44.5	50.8	92	50.8	26.7	6.4	95.3	22.4	4	3/4"x185	5/8"x105	R16
1	158.8	44.5	60.33	98.3	57.2	33.5	6.4	108	25.4	4	7/8"x200	5/8"x110	R18
1 1/2	203.2	52.4	82.55	119.2	79.2	48.3	6.4	146.1	31.8	4	1 1/8"x245	5/8"x135	R23
2	235	58.7	101.6	134.9	95.3	60.5	6.4	171.5	28.4	8	1" x 245	5/8"x135	R26
2 1/2	266.7	66.7	111.13	152.3	114.3	73.2	6.4	196.9	31.8	8	1 1/8"x275	5/8"x150	R28
3	304.8	76	127	177.7	133.4	88.9	9.5	228.6	35.1	8	1 1/4"x305	3/4"x165	R32
4	355.6	87.3	157.18	201.6	165.1	114.3	12.7	273.1	41.1	8	1 1/2"x355	1" x 190	R38
6	482.6	120.7	228.6	285.8	235	168.4	12.7	368.3	53.8	8	2" x 475	1" x 255	R47
8	552.5	141.3	279.4	331.8	304.8	219.2	12.7	438.2	53.8	12	2" x 520	1" x 275	R51
10	673.1	182.6	342.9	436.6	374.7	273.1	12.7	539.8	66.5	12	2 1/2"x660	1" x 350	R55
12	762	201.7	406.4	481	441.5	323.9	12.7	619.3	73.2	12	2 3/4"x730	1" x 385	R60

1. Other NPT or Socket Sizes for Tap connection may be furnished if required.
2. On Ring Joint Flanges, When depth of groove is 0.438"[11.12mm] or greater, On Ring Joint and Raised Face flanges, according to tap sizes, to avoid interference or insufficient metal between groove & pressure tap holes or flange thickness & tap connection, it will require an angular meter tap or change in drill size or method of drilling.

APPLICABLE CODES FOR TAPPINGS AND BORE TYPES

BORE TYPES	APPLICABLE CODES	TAPPINGS
CONCENTRIC	ISO-5167, AGA NO. 3, ASME MFC-3M, L.K.SPINK.	FLANGE
	ISO-5167, ASME MFC-3M, L.K.SPINK.	CORNER
	AGA NO.3, R.W. MILLER, L.K.SPINK.	PIPE[2 1/2D & 8D]
	ISO-5167, ASME MFC-3M L.K.SPINK.	RADIUS[D & 1/2D]
	R.W. MILLER	VENA CONTRACTA
ECCENTRIC	R.W. MILLER, L.K.SPINK.	FLANGE
	BS 1042	CORNER
	R.W. MILLER	VENA CONTRACTA
SEGMENTAL	R.W. MILLER, L.K.SPINK.	FLANGE
	R.W. MILLER	VENA CONTRACTA
QUADRANT	R.W. MILLER, BS 1042, L.K.SPINK.	FLANGE
	R.W. MILLER, BS 1042, L.K.SPINK.	CORNER

www.samilind.co.kr





HEAD OFFICE & FACTORY

405-848
#434-12, 44B-12L, NONHYUN - DONG,
NAMDONG-GU, INCHEON, KOREA.
TEL : 82-2-2618-2000 ~ 4
82-32-819-9671 ~ 7
FAX : 82-32-819-9693 ~ 4
WEB PAGE : www.samilind.co.kr
E-MAIL : samilind79@samilind.co.kr

This document is the property of **SAMIL.**, Any unauthorized attempt to reproduce it, in any form, is strictly prohibited.

First published on 05 Sep. 2005.

AVERAGING PITOT TUBE

ASME STAMP
"U" & "PP"

DIN EN ISO 9001

SAPT FLOW SENSOR



SAMIL INDUSTRY CO.,LTD.

SAM IL INDUSTRY CO.,LTD.

ENQUIRY- / ORDER SHEET FOR SAPT

TO : SAMIL INDUSTRY CO.,LTD.	FROM :
WEB PAGE : www.samilind.co.kr	WEB PAGE :
E - MAIL : samilind79@samilind.co.kr	E - MAIL :
TEL NO. : 82-2-2618-2000 ~4, 82-32-819-9671 ~ 7	TEL NO. :
FAX NO. : 82-32-819-9693 ~4	FAX NO. :

We are pleased to receive this enquiry- / order sheet for products from your company.

SAPT SPECIFICATION

General

Customer :
Service :
Tag-No. :

Pipe Data

Material :
Inside Diamter : mm
Insulation : mm

Pressure : psi(g)
Wall Thickness : mm

Fluid

Name :
Direction of Stream

Liquid ☐ Steam ☐ Gas/Air ☐
Horizontal ☐ Vertical ☐

Physical Dimension	Mechanical Design	Max. Condition	Nor. Condition	Min. Condition	Unit
Flow					
Temperature					
Pressure(kgf/cm2) ☐ abs ☐ gauge					
Density@Oper.					
Viscosity@Oper.					

Http://www.samilind.co.kr

Desired Model :

-Compact Version (If Technically Possible) ☐
-Sensor Mounting with Screwed Thread ☐
-Sensor Mounting in Flanged Version ☐
- ☐ KS/JIS Flange
- ☐ ANSI Flange
- ☐ Others

ASME STAMP

CONTENTS

SAM IL INDUSTRY CO.,LTD.

GENERAL FOR AVERAGING PITOT TUBES ---- 4

MODELS FOR SAPT SERIES ---- 8

SAPT-10 ---- 9

SAPT-15/16 ---- 9

SAPT-20/21 ---- 9

SAPT-25/26 ---- 9

SAPT-35/36 ---- 9

SAPT-65/66 ---- 9

SAPT-100 ---- 9

SPECIAL TYPE ---- 24

The selection of the proper pitot tube sensor can be made quickly and reliably by this manufacturer if the operational data about the existing pipe line, the fluid and the desired version are made available according to the table shown left-hand side.





ASME STAMP

CE

TÜV CERT DIN EN ISO 9001

MORE ACCURATE FLOW MEASURING FOR LIQUIDS, GASES AND STEAM

1. Introduction to Pitot Tube Flow Measurement

Pressure sensors are classified as Differential Pressure sensors for flow measurement.

The measuring principle of the pitot tube utilizes the differences between the pressure ridge on the upstream side of a bluff body and the static pressure on its down stream side.

SAPT - Averaging Pitot Tube Sensors, see sample Fig.1, are mainly used to measure the volumetric flow of liquids, gases and steam in closed pipes ranging from NPS 1/2" to 480" (DN 20 to DN 12000).

Examples of their applications are precise volumetric flow measurement in batch processes, continuous measurement of liquid ingredients in the process industry, fuel, air, steam and gases as primary energy source as well as in control functions requiring a high degree of stability and repeatability.



Fig. 1

Exemplary in comparsion to almost all other flow measuring instruments is the **SAPT**-sensor's ease of installation. The installation consists of these steps: drilling of the pipe, weld-olet is welded on to the pipe, **SAPT** is inserted. Models **SAPT-GSM** , see Fig.2, allows installation and removal without shutting the process down.

SAPT-pitot tube sensors were developed with the goal of high reliability even under difficult conditions. **SAPT**-pitot tube sensors are optimized in several ways with respect to fluid stream conditions. Advantages of the engineered sensor profile are their low permanent pressure loss as well as the consistent measurement accuracy over a wide range of Reynolds numbers.

For over twelve(12) years **SAPT**-pitot tube sensors have been applied in the large industry plant. Their exemplary reliability and excellent long-term use record resulted in broad acceptance by customers. Many measurements by independent institutes are testimony to the **SAPT**-sensor's high measuring accuracy.

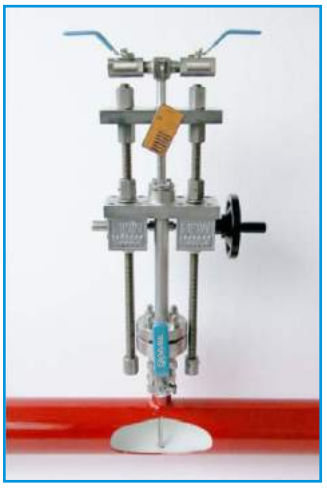

Fig. 2

ASME STAMP "U" & "PP"

SAM IL INDUSTRY CO.,LTD.
#434-12, NONHYUN-DONG, NAMDONG-GU, INCHEON, KOREA
Tel : 82-32-819-9671~8 Fax : 82-32-819-9693~4
http://www.samilind.co.kr E-Mail : samilind79@samilind.co.kr

2. Measurement Principle of Pitot Tube Sensors

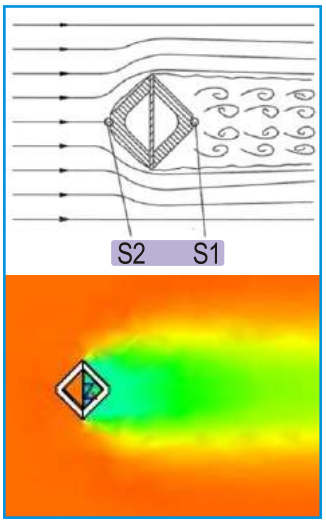

Fig. 3

According to the continuity law derived by Bernoulli and the energy equation, the sum of the pressure energy and the potential and kinetic energy of a flowing fluid inside a pipe and in conditions of stationary and frictionless flow is the same at any time and in any part of the pipe.

$$p_{stat} + p_{dyn} = \text{const} \qquad \textbf{(Eq. 2.1)}$$

The factor p_{stat} is the static pressure equally distributed in all directions. The other term in the equation represents the dynamic pressure, effective in the flow direction, p_{dyn}.

For flowing fluids in horizontal pipes, with a small velocity compared to the Mach-number (Ma <<1), the dynamic pressure p_{dyn} of a fluid with a flowing velocity v, a density ρ and a resistance factor ζ is calculated as:

$$P_{dyn} = \zeta \frac{\rho}{2} v^2 \qquad \textbf{(Eq. 2.2)}$$

Inserting a fixed body into a flowing fluid causes the flow to dam up immediately upstream of the body and to be completely zero at S2 ,see Fig.3. At this point the total pressure p_{S2} :is

$$p_{S2} = p_{stat} + p_{dyn} \qquad \textbf{(Eq. 2.3)}$$

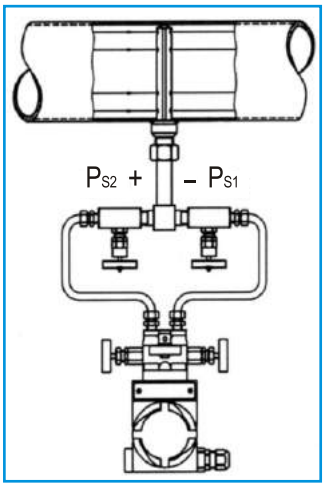

Fig. 4

The apertures of the sensor's downstream side are only affected by the direction-independent static pressure p_{stat}.The difference in both pressures, the differential pressure Δp, is a measure of the velocity with which the inserted body is impacted, see Fig.4.

$$\Delta p = p_{S2} - p_{S1} \qquad \textbf{(Eq. 2.4)}$$

Substituting Eq. 2 and 3 into 4 results in

$$\Delta p = \zeta \frac{\rho}{2} v^2 \qquad \textbf{(Eq. 2.5)}$$

SAM IL INDUSTRY CO.,LTD.
#434-12, NONHYUN-DONG, NAMDONG-GU, INCHEON, KOREA
Tel : 82-32-819-9671~8 Fax : 82-32-819-9693~4
http://www.samilind.co.kr E-Mail : samilind79@samilind.co.kr

ASME STAMP
"U" & "PP"
CE
TÜV CERT DIN EN ISO 9001

MORE ACCURATE FLOW MEASURING FOR LIQUIDS, GASES AND STEAM

Measured Value	Fomula for SI Units	Equation
Standard Volumetric Gas Flow	$Q_{vn} = k(\bullet \circ \bullet) A \varepsilon \sqrt{\frac{2\Delta p P_b Z_n T_n}{\rho_n T_b Z_b P_n}}$ $\Delta p = \frac{Q_{vn}^2 \rho_n T_b Z_b P_n}{2 P_b Z_n T_n k^2 (\bullet \circ \bullet) A^2 \varepsilon^2}$	1.1
Actual Volumetric Gas Flow	$Q_v = k(\bullet \circ \bullet) A \varepsilon \sqrt{\frac{2\Delta p}{\rho_b}}$ $\Delta p = \frac{Q_v \rho_b}{2 k^2 A^2 \varepsilon^2}$	1.2
Mass Flow of Gas & Steam	$Q_m = k(\bullet \circ \bullet) A \varepsilon \sqrt{2\Delta p \rho_b}$ $\Delta p = \frac{Q_m}{2 \rho_b k^2 A^2 \varepsilon^2}$	1.3
Liquid Mass Flow	$Q_m = k(\bullet \circ \bullet) A \sqrt{2\Delta p \rho_b}$ $\Delta p = \frac{Q_m}{2 \rho_b k^2 A^2}$	1.4
Volume Rate of Flow Liquid	$Q_v = k(\bullet \circ \bullet) A \sqrt{\frac{2\Delta p}{\rho_b}}$ $\Delta p = \frac{Q_v^2 \rho_b}{2 k^2 A^2}$	1.5

The volumetric flow can be calculated using the continuity law with a pipe area, A and an average flow velocity. The above formulas can be derived and differential pressure can be derived from flow equation.
In case a flow is of gas, the expansion factor needed to calculate the flow of gases and steam is computed as next page.

ASME STAMP "U" & "PP"
CE
TÜV CERT DIN EN ISO 9001

SAM IL INDUSTRY CO.,LTD.
#434-12, NONHYUN-DONG, NAMDONG-GU, INCHEON, KOREA
Tel : 82-32-819-9671~8 Fax : 82-32-819-9693~4
http://www.samilind.co.kr E-Mail : samilind79@samilind.co.kr

MORE ACCURATE FLOW MEASURING FOR LIQUIDS, GASES AND STEAM

Symbol	Definition	Units in Equations				
		1.1	1.2	1.3	1.4	1.5
Δp	Differential Pressure at Sensor Profile	Pa	Pa	Pa	Pa	Pa
ρ_n	Medium Density at Standard Conditions	kg/Nm^3	-	-	-	-
ρ_b	Medium Density at Oper. Conditions	kg/m^3	kg/m^3	kg/m^3	kg/m^3	kg/m^3
ε	Expansion Factor	1	1	1	-	-
A	Cross Sectional area of the pipe	m^2	m^2	m^2	m^2	m^2
D_i	Pipe Inside Diameter	-	-	-	-	-
k	K-Factor(Flow Coefficient)	1	1	1	1	1
P_b	Operating Pressure	Pa	-	-	-	-
P_n	Absolute Pressure of Gas at std. Conditions	Pa	-	-	-	-
Q_m	Mass Flow	-	-	kg/s	kg/s	-
Q_v	Volumetric Flow	-	m^3/s	-	-	m^3/s
Q_{vn}	Volumetric Flow at Standard Conditions	Nm^3/s	-	-	-	-
T_b	Temp. of Gases at Oper. Conditions	k	-	-	-	-
T_n	Temp. of Gases at Std. Conditions	k	-	-	-	-
Z_b	Real Gas Factor at Oper. Conditions	1	-	-	-	-
Z_n	Real Gas Factor at Std. Conditions	1	-	-	-	-

The expansion factor of gases and steam is defined as :

$$\varepsilon = 1 - \frac{\Delta p}{k(\blacksquare \circ \blacksquare)} \left\{ \left(1 - \frac{2b}{\sqrt{\pi F}} \right)^2 0.31424 - 0.009484 \right\}$$

Symbol	Definition	Units
Δp	Differential Pressure at Sensor Profile	1
ε	Expansion Factor	Pa
P_b	Operating Pressure	Pa
k	Iostropic exponent of gases(also : ratio of specific temperatures of ideal gases)	1
b	Width of sensor profile perpendicular to flow direction	m
F	Cross sectional area of Pipe	m^2

SAM IL INDUSTRY CO.,LTD.
#434-12, NONHYUN-DONG, NAMDONG-GU, INCHEON, KOREA
Tel : 82-32-819-9671~8 Fax : 82-32-819-9693~4
http://www.samilind.co.kr E-Mail : samilind79@samilind.co.kr

ASME STAMP
"U" & "PP"

MORE ACCURATE FLOW MEASURING FOR LIQUIDS, GASES AND STEAM

3. Required Fluid Conditions

Pitot tube sensors, such as orifice plates, flow nozzle or venturi tubes are classified as flow measuring devices which utilize differential pressure to measure
volumetric flow. The technical descriptions in "ASME Fluid Meters" and ASME PTC-19.5, "Flow Measurement" are analogous pitot tubes:

- The fluid has to completely fill the pipe so that the measured differential pressure is representative of the volumetric flow. fluids in partially filled pipes can only be measured if a full pipe can be arranged (e.g. by means of a siphon)

- The fluid must be single-phase.
  Two-phase fluids(e.g. Water-air mixtures) cannot be measured.

The average flow velocity v_m and the kinematic viscosity υ of the fluid to be measured in a given pipe size with an inside diameter d must reach a Reynold's number value Re > 3150 according to the formula

$$\mathbf{Re} = \frac{v_m \, d_i}{\upsilon} \qquad \textbf{(Eq. 3.1)}$$

Meaning: the flow has to be sufficiently turbulent. Fluids of laminar nature cannot be measured with pitot tubes. Fluids may contain small particles or bubbles. The pressure generated in front of the sensor apertures causes a deflection of the particles or bubbles.
Fluids which tend to crystallize will quickly plug the pressure tubes of the sensor and therefore cannot be measured with pitot tubes. Gases and gas mixtures containing dust can coat the sensor to an undesirable degree to clean such dust deposits the air purge unit LSP (Fig.5)
can be applied. This instrument will automatically flush out the sensor with air pressure in programmable intervals and durations . For flue gas mixtures a sensor version is recommended, which allows mechanical cleaning from both ends without having to take the sensor out of the pipe (see Fig.6)

In steam measurement applications condensate pots are used, inside of which a constant transition from steam to condensate and vice versa occurs. The pressure transfer is achieved via water columns.



Air Purge unit LSP for automatic cleaning of pitot tubes used in gas and gas mixtures containing dust or bubbles.

Fig. 5



SAPT-100

Fig. 6

ASME STAMP "U" & "PP"
SAM IL INDUSTRY CO.,LTD.
#434-12, NONHYUN-DONG, NAMDONG-GU, INCHEON, KOREA
Tel : 82-32-819-9671~8 Fax : 82-32-819-9693~4
http://www.samilind.co.kr E-Mail : samilind79@samilind.co.kr

4. Advantages of Averaging Pitot Tube Flow Sensors

4.1 Advantages in Comparison to Orifice Plates

4.1.1 Lower Installation Costs

Compared to an orifice plate the **SAPT**-Flow Sensor reduces material- and labor costs for the installation as well as operating expenses.

Part of the installation material costs of an **SAPT**-sensor are the expenses for a weld boss and - depending on the sensor type - for a counter support fitting. The material costs for an orifice installation consist of two flanges and the necessary screws and hardware. The advantage in the **SAPT**-sensors material costs are especially high for: large diameter pipes, pipe materials of exotic materials because of chemical compatibility issues, pipes for high pressure applications.

Labor costs for an **SAPT**-sensor or orifice plate installation must include the wages for the welders. The installation of a weld boss requires - depending on the sensor type - a weld seam of approx. 10 cm (4"). The installation of a DN100 /4" (DN500/20") requires a weld seam of approx. 36 cm /14" (approx. 628"). The time needed to install an orifice plate is approx. 12 hours, as compared to approx.1.5 hours for an **SAPT**-sensor. The **SAPT**-sensor in this case saves 10.5 labor hours.

The total savings in material- and labor costs which can be realized by using an **SAPT**-sensor are at least 25% in a 4" pipe installation and at least 70% in a 20" pipe installation.

4.1.2 Bi-Directional Flow Measurement



Orifice Plate for Flow Measurement

Fig. 7

The profile of all **SAPT**-pitot tube sensors is designed to be symmetrical to the plane between the pressure channels. This arrangement results in the same resistance values and thus the same k-factor with respect to the fluid properties during forward as well as reverse flow. The differential pressures generated by a given flow velocity are the same for flow in either direction. They only differ in the +/- sign.
This constitutes an advantage over to the orifice plate, see Fig. 7, which - because of its angled downstream corner - has different resistance values for forward and reverse flows. It would indicate widely different differential pressures for the same flow velocity in opposite directions.
The differential pressure measurement and processing can be accomplished with either one or two signal converters. The use of two signal converters is justified in cases requiring a high resolution or if separate signals are needed for forward and reverse flow.

SAM IL INDUSTRY CO.,LTD.
#434-12, NONHYUN-DONG, NAMDONG-GU, INCHEON, KOREA
Tel : 82-32-819-9671~8 Fax : 82-32-819-9693~4
http://www.samilind.co.kr E-Mail : samilind79@samilind.co.kr

ASME STAMP
"U" & "PP"
CE
TÜV CERT DIN EN ISO 9001

MORE ACCURATE FLOW MEASURING FOR LIQUIDS, GASES AND STEAM

4.1.3 Shorter Up/Down Straight Pipe Run Requirements

In order to increase the SAPT-sensor's measurement accuracy the dynamic and static pressures are measured at four points along the sensor profile and averaged. A non-symmetrical flow profile thus has a smaller influence on the measured result. This leads furthermore to shorter up/down stream straight pipe run requirements. For example: The SAPT-Flow Sensor requires 7 straight pipe diameters downstream of a 90 -bend. An orifice plate requires 10 to 46 times as much depending on the ratio.

4.1.4 Lower Permanent Pressure Loss

The sensor profile of the **SAPT**-sensor is optimized with respect to the conditions of a flowing fluid and causes - in comparison to an orifice plate - a considerably smaller permanent pressure loss. The following application example is to illustrate this point: pipe size 10 inches (DN 250); fluid: water; fluid temperature T = 42 °F(5.6 °C); operating pressure p = 112 psig (7.72 bar(g)); volumetric flow Qv = 2740 GPM (622.3 m3/h) and average flow velocity = 1.2 m/s).

Items	β−Ratio	Pipe I.D (mm)	Bore,d (mm)	Diff. Pres (mmH2O)	PPLoss (mmH2O)	Ratio of PPLoss vs △P	Upstream Straight Length with 90° bend	Downstream Straight Length with 90° bend
SAPT	-	254.51	-	1510.222	164.57	10.897	7 x D	3 x D
SOP	0.25~0.35	Cavitation Occured, Downstream Pressure is less than Vapor Pressure.						
	0.40	254.51	101.803	62205.4	51167.11	82.255	14 x D	6 x D
	0.45	254.51	114.529	38057.1	29631.37	77.860	14 x D	6 x D
	0.50	254.51	127.254	24304.2	17753.17	73.046	14 x D	6 x D
	0.55	254.51	139.979	16025.2	10866.67	67.810	16 x D	6 x D
	0.60	254.51	152.705	10814.6	6720.103	62.139	18 x D	7 x D
	0.65	254.51	165.430	7414.19	4152.240	56.004	22 x D	7 x D
	0.70	254.51	178.156	5127.34	2530.391	49.351	28 x D	7 x D
	0.75	254.51	190.881	3548.72	1493.378	42.082	36 x D	8 x D

SAPT : **SAMIL Averaging Pitot Tube**
SOP : **SAMIL Orifice Plate**

ASME STAMP "U" & "PP"
CE
TÜV CERT DIN EN ISO 9001

SAM IL INDUSTRY CO.,LTD.
#434-12, NONHYUN-DONG, NAMDONG-GU, INCHEON, KOREA
Tel : 82-32-819-9671~8 Fax : 82-32-819-9693~4
http://www.samilind.co.kr E-Mail : samilind79@samilind.co.kr

MORE ACCURATE FLOW MEASURING FOR LIQUIDS, GASES AND STEAM

As this example illustrates it is possible to reduce the permanent pressure loss of an orifice plate by selecting the proper diameter-ratio = d/D. The price to be paid for this is a considerable increase in longer straight pipe run requirements. The comparatively higher permanent pressure loss of orifice plates can be explained by their increased influence on the flow profile and related generation of eddy currents.

In summary: Compared to orifice plates pitot tubes have the advantage of causing considerably lower permanent pressure losses while generating useful differential pressures. A further advantage is the need for shorter up/down stream straight pipe requirements.

The **SAPT**-sensor's lower permanent pressure loss reduces the energy- and thus operating costs of a measurement point considerably. In many applications the replacement costs of an **SAPT**-sensor for an orifice plate are amortized within a very short time period.

4.2 The SAPT-Sensor Profile
4.2.1 Design Advantages For Flow Measurement

Unique Sensor Profile

The design of the SAPT-sensor profile, see Fig.8, is optimized with respect to fluid flow properties, and meets the technical challenges of accurate measurement as well as static and sensor-oscillating problems. It represents a forward step in technical development.



Fig. 8

Excellent Linearity

A significant improvement in the sensor design with respect to the fluid properties is the shape of the sensor profile. The fluid separation takes place at the same spot on the sensor over a wide range of Reynols numbers, which results in minimal Reynold number dependency. This specially designed **SAPT**-sensor profile achieves excellent linearity over a wide measuring range.

Examplary Reproducibility

The form design of the sensor profile not only improves the linearity but also the reproducibility of the measurement in cases of averaging within certain time intervals. The result is especially positive with shorter time intervals

Superior Averaging

In order to reduce the influences of in most cases less than ideal flow profiles, the differential pressures representing the local flow velocities are measured at four points, averaged and processed.
Each of these four measuring points has pressure sensing apertures located opposite from each other. The positioning of these pressure apertures is designed for fluid flow profiles as they are encountered in real applications. .

SAM IL INDUSTRY CO.,LTD.
#434-12, NONHYUN-DONG, NAMDONG-GU, INCHEON, KOREA
Tel : 82-32-819-9671~8 Fax : 82-32-819-9693~4
http://www.samilind.co.kr E-Mail : samilind79@samilind.co.kr

ASME STAMP
"U" & "PP"
CE
TÜV CERT DIN EN ISO 9001

MORE ACCURATE FLOW MEASURING FOR LIQUIDS, GASES AND STEAM

SAPT-Sensors Are Better Than Any Cylindrical Sensor

Pitot tube sensors with a cylindrical sensor profile do not belong to the same class as **SAPT**- pitot tube sensors. The differences lie in the form and design of cylindrical sensors.

A typical cylinder-shaped sensor consists of a thin walled pipe with four sensing ports to measure the total pressure and one sensing port to measure the static pressure. The static pressure is lead to the outside via a thin pice of pipe located inside the sensor profile.

The main disadvantages are measurement inaccuracies and poor reproducibility. The reasons for this are a weakly defined technical relationship to fluid flow properties and thus a Reynolds number dependence. Contrary to a sharp-edged sensor profile design the fluid separation point is not fixed on the sensor (see Fig.9).

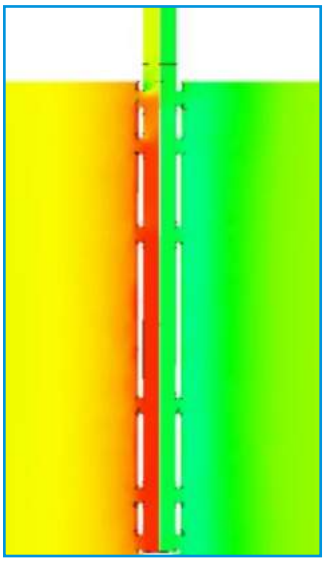

CFD Analysis
Fig. 9

4.2.2 Sensor Profile with Integrated RTD resitance thermocouple

In order to measure the fluid temperature all **SAPT**-averaging pitot tube sensors- with exceptions:
SAPTD-HT, **SAPTD-HTG** and types -20/21 - can optionally be equipped with a RTD resistance thermocouple, see Fig.10. The advantages of the selected thermometer are as follows:

- The resistance thermometer is rod shaped, of robust design for long term Use.
- A stainless steel (Mat'l 316 SS) tube provides a reliable protective cover For the resistance thermometer.
- This version is designed with long term reliable components for industrial applications with increased challenges of oscillations.
- The temperature sensor is of 3-wire design in order to reduce the effective resistance.
- The resistance thermometer is usable in a temperature range from - 200 to +500 ˚C.
- The constructive solution of inserting the resistance thermometer is unique and convinces with the following advantages:



Cross Sectional View of **SAPT** Type Sensor profile for insertion of a resistance thermocouple.

Fig. 10

ASME STAMP "U" & "PP"
CE
TÜV CERT DIN EN ISO 9001

SAM IL INDUSTRY CO.,LTD.
#434-12, NONHYUN-DONG, NAMDONG-GU, INCHEON, KOREA
Tel : 82-32-819-9671~8 Fax : 82-32-819-9693~4
http://www.samilind.co.kr E-Mail : samilind79@samilind.co.kr

SAPT-10, 15/16, 20/21, 25/26, 35/36, 65/66, 100

The averaging pitot tube series **SAPT** is used to measure volumetric flow of liquids and gases. It is designed to be installed through threaded weldolet pipe mounting parts. It offers a good price / performance ratio in applications with no high pressure or temperature requirements.
Standard sensor material is 316 SS. The design is such that the DP transmitter can be integrally mounted onto the sensor via an optional 3-way-manifold. An optional RTD temperature sensor is available for mass flow measurement

The Models shown in the left-hand side are **SAMIL**'s Basic models and they are classified into more detail models due to pressure and temperature.

End support only for **SAPT**-16,-21,-26, -36,-66.

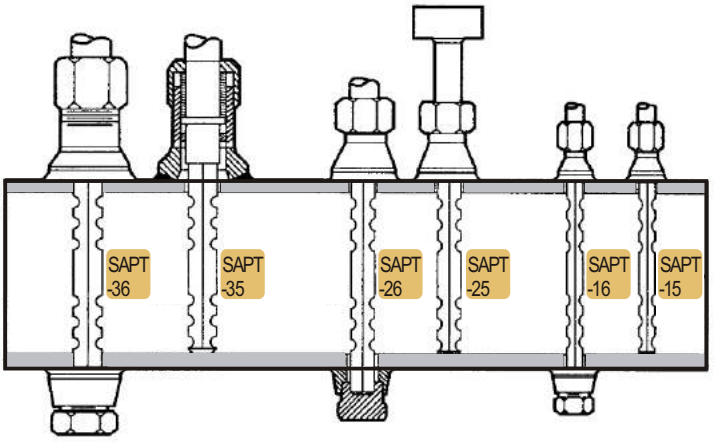

Fig. 11 SAPT - Series

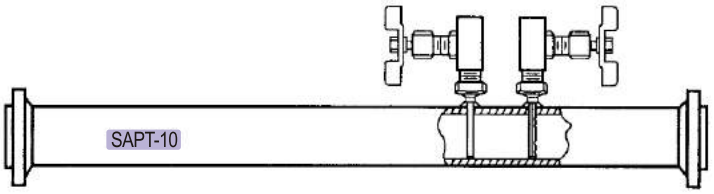

Fig. 12 SAPT - Inline Type



Fig. 13 SAPT-Screwed



Fig. 13 SAPT-Flanged



Fig. 13 SAPT-100

SAM IL INDUSTRY CO.,LTD.
#434-12, NONHYUN-DONG, NAMDONG-GU, INCHEON, KOREA
Tel : 82-32-819-9671~8 Fax : 82-32-819-9693~4
http://www.samilind.co.kr E-Mail : samilind79@samilind.co.kr

ASME STAMP "U" & "PP"

SAPT-100

The SAPT-sensor SAPT-100 is specially designed to measure volumetric flow of flue gas. In this model the two pressure chambers within the sensor are enlarged. The reasons are as follows:
1) The frequency of cleaning requirements is reduced.

2) Cleaning by mechanical means or with air pressure is made easy.
The design allows cleaning of the pressure chambers via the sensor's pipe mounting assembly as well as from its flanged end support For cleaning purposes the two parallel pressure chambers have a round shape which runs over the entire length of the sensor.

The standard sensor material is 316 SS; the following materials are options: Duplex, Hastelloy C, Incoloy and PVDF.
For automatic cleaning the LSP air-purge unit is available.



SAPT-100

ASME STAMP
"U" & "PP"
CE
TÜV CERT DIN EN ISO 9001

SAM IL INDUSTRY CO.,LTD.
#434-12, NONHYUN-DONG, NAMDONG-GU, INCHEON, KOREA
Tel : 82-32-819-9671~8 Fax : 82-32-819-9693~4
http://www.samilind.co.kr E-Mail : samilind79@samilind.co.kr

SAPT-GSN,-GSM,-GSH

Special Types for Installation / Removal under Pressure

The **SAPT-GS** sensor series is designed to measure the volumetric flow of liquids, gases and steam.
The construction features a welding boss between the pipe and the sensor-related parts and a compression fitting to seal the sensor profile. A safety chain between the installed sensor and the pipe serves as a protective device during the removal process.
a **SAPT-GSN** sensor is usable up to an operating pressure of 87 psi and an operating temperature of up to 392 °F (200°C).

In cases where the **SAPT-**sensor sizing program recommends a counter end support because of the high flow velocity it is better to select the next size sensor model. During the initial installation it is not possible to install a sensor counter support. During subsequent installations under pressure it can also be difficult to meet the counter support at the opposite end of the pipe.

Furthermore the maximum installation values listed in the **SAPT-**senosr program must be observed.



SAPT-GSN

The **SAPT-GSM**-Sensor series is designed to measure volumetric flow of liquids and gases. The insertion or removal of the sensor is made easy by two guide-rod spindles or (as an option) via a hand wheel driven gearbox. The **SAPT-GSM** sensor is applicable to an operating pressure of up to 580 psi and an operating temperature of up to 572°F (300 C°).



SAPT-GSM

The **SAPT-GSH** pitot tube sensor is designed to measure the volumetric flow of liquids and gases.
The installation is done via a flanged connection. The flanged packing gland above the shut off valve ensures proper sealing of the sensor as well as a shortening of the leverage arm.
The installation / removal of the sensor is facilitated via a pair of guiding spindles or a gear box with hand wheel (optional).
The **SAPT-GSH** sensor is designed for applications with a max. operating pressure of 1450 psi & a max. Operating temperature of 752°F (400°C).



SAPT-GSH

SAM IL INDUSTRY CO.,LTD.
#434-12, NONHYUN-DONG, NAMDONG-GU, INCHEON, KOREA
Tel : 82-32-819-9671~8 Fax : 82-32-819-9693~4
http://www.samilind.co.kr E-Mail : samilind79@samilind.co.kr

ASME STAMP "U" & "PP"

LOCATION

STRAIGHT RUN REQUIREMENTS

Since the accuracy of the measurements with the **SAPT** sensor depend on the formation of a flow profile which is as undisturbed as possible, the selection of a suitable installation site is a factor of an important which should not be underestimated.
The following tried-and-tested required trouble-free upstream and downstream section should facilitate your choice of the best installation site.
In general, control valves, butterfly valves and shut-off valves should be installed after(downstream) the **SAPT** sensor.

NOTE :
Where the recommended straight pipe sections for fully developed flow characteristics are not available, a comparison measurement(SAPT, single-point measurement, etc.) Can be taken to adjust the measured-value accuracy to the conditions of the metering pipe. The single-point measurement ensures that the differential pressure corresponds to the true speed so that the specified accuracy is achieved.

PIPING CONFIGURATION	A = UPSTREAM	B = DOWNSTREAM
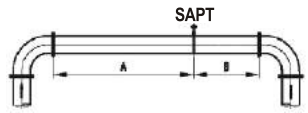	7	7
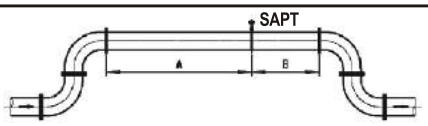	9	3
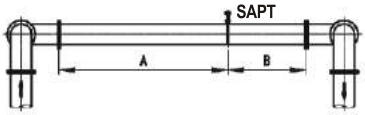	17	4
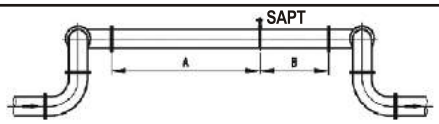	18	4
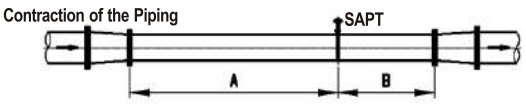	7	3
	7	3
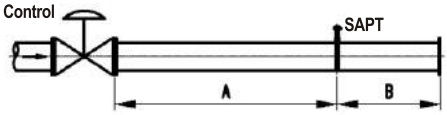	24	4

ASME STAMP
"U" & "PP"

#434-12, NONHYUN-DONG, NAMDONG-GU, INCHEON, KOREA
Tel : 82-32-819-9671~8 Fax : 82-32-819-9693~4
http://www.samilind.co.kr E-Mail : samilind79@samilind.co.kr

SAPT-FLOW-SENSOR APERTURES

LARGE PRESSURE APERTURES AND PRESSURE CHANNELS

Large diameter pressure sensing apertures and pressure channels allow the long term uninterrupted use even in contaminated fluids. Condensate in form of drops can more easily flow off through the larger areas. A mechanical blockage of the pressure channels through condensate drops is thus eliminated. The table below lists the characteristic dimensions depending on the type of **SAPT** sensor.

SENSOR DESCRIPTION	Sensor Type, SAPT-				
	15/16	20/21	25/26	35/36	65/66/100
Width of profile perpendicular to flow	11 mm	12 mm	25.4 mm	42 mm	56 mm
height of profile in flow direction	10.5 mm	11 mm	23 mm	36 mm	50 mm
Dimeter of pressure sensing apertures	4 mm	4 mm	8.5 mm	10 mm	16 mm
Area of pressure channel	14 mm^2	28 mm^2	62 mm^2	78 mm^2	113 mm^2

ASME STAMP "U" & "PP"
CE
TÜV CERT DIN EN ISO 9001

SAPT-100

5. Installation for Rectangular and Square Duct

Flow measurement in rectangular or square ducts is possible .



If substitute diameter,

$$D = 2 \times \sqrt{\frac{A \times B}{\pi}}$$

The sensor is always made for the longer side to better cover the flow profile.

6. Selection Criteria

To Order a Model for SAPT-Averaging Pitot Tube Sensor

SAPT - □□□ - □

SAMIL Averaging Pitot Tube Sensor

Classified Number
10
15/16
20/21
25/26
35/36
65/66
100
: 16,26,36,66 only available for end support.

Mounting Type
S : Screwed
F : Flanged

SAPT - □□□ - □□□

Gear Spindle Type
GSN
GSM
GSH

Classified Number
10
15/16
20/21
25/26
35/36
65/66

* Specify as an option, Temperature Sensor, D/P Transmitter, etc.

ASME STAMP "U" & "PP"
CE
TÜV CERT DIN EN ISO 9001

SAM IL INDUSTRY CO.,LTD.
#434-12, NONHYUN-DONG, NAMDONG-GU, INCHEON, KOREA
Tel : 82-32-819-9671~8 Fax : 82-32-819-9693~4
http://www.samilind.co.kr E-Mail : samilind79@samilind.co.kr

www.samilind.co.kr



HEAD OFFICE & FACTORY

405-848
#434-12, 44B-12L, NONHYUN-DONG,
NAMDONG-GU, INCHEON, KOREA
TEL : 82-2-2618-2000 ~ 4
82-32-819-9671 ~ 7
FAX : 82-32-819-9693 ~ 4
URL : www.samilind.co.kr
E-MAIL : samilind79@samilind.co.kr

Without Permission, Duplicate or Reproduction Prohibited.