TÜV CERT DIN EN ISO 9001

CE

LEVEL GAUGE

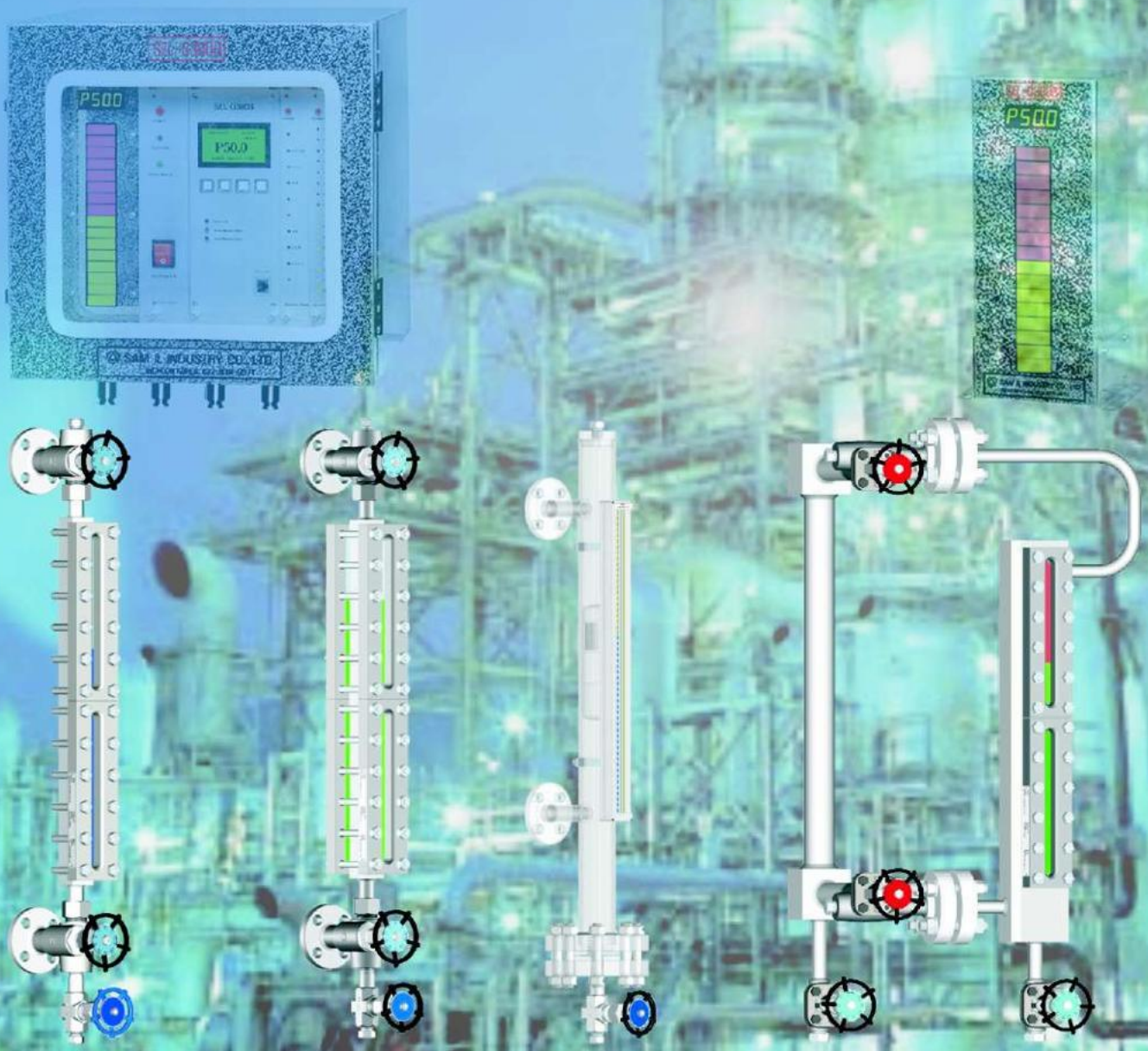

SAM IL INDUSTRY CO.,LTD.















The Hydraulic-servo computer type universal testing machine.

this machine conduct tension, compression, and bending testing of metals, base metals, and all kinds of other materials.

Now as we've been expanding over the few years, we've been equipped with general facilities for design, R&D, manufacturing, and inspection & testing.










A MESSAGE OF PRESIDENT



Welcome to **SAM IL INDUSTRY CO.,LTD.,** a creative and productive company we are all very proud of.

Founded on 01,Aug 1979, **SAM IL** is now being produce Level gauge, Orifice assembly, Flow nozzle, Venturi tube, Sight glass, etc., for petrochemical equipments, plant and environment installations and/[or] waste water disposal facilities. On this occasion, our staffs and employees assure our customers by renewed efforts to supply the best quality and lower price products through the most efficient systems of design, production, test & inspection, quality assurance policy, and also we are fully committed to becoming a model industry in terms of innovation, punctual delivery date and prepared service.

To become the top provider of level gauges, sight glass & flow elements, **SAM IL INDUSTRY CO.,LTD.**, we are ready to face the challenge of the next generation, an era of great change. To begin with, we have developed many distinguished items with a wide variety of Level gauges by developing the Electrode Type Level Gauge in the efforts to become a capable leader in the future.

We look forward to your unsparing advice, comments and encouragement. In closing, sincerely wish for your company's greater developments and prosperities. Thank you.

S. M HONG — **Signature**

13. Jul 2005 — **Date**



HISTORY OF COMPANY

2006~

2006. 05 Participation of INTERMACH 2006 in Bangkok.
2006. 02 Began the development of LED type indicator

2004~2005

2005. 10 Participation of New York Exhibition.
2005. 06 Participation of ISA Mexico Expo Control 2005.
2005. 03 Participation of MEOS 2005 Exhibition in Bahrain.
2004. 09 Participation of MICONEX 2004 Exhibition, The 15th international Fair for Measurement, Instrumentation & Automation in China.
06 Participation of ICA 2004, The 7th international Exhibition on Instrumentation Control & Automation Technology in

2001~2003

2003. 11 Participated in "Measurement and Control Show 2003 in Tokyo" in Japan.
10 Developed and Produced The Electrode Type Level Gauge.[Next Generation]
2002. 10 A Concerted Action with INTRA-AUTOMATION GmbH-Germany[Technical Cooperation].
06 Acquisition of CE Mark Certification & Successful Renewal of ISO 9001.
2001. 09 Participation of INTERKAMA Exhibition in Germany.
01 Export promotion to Middle East Asia [Sole Agent Relationship with Rezayat].

1998~1999

1999. 11 Participation of CIA 99 Exhibition in Germany.
1998. 11 Developed and Produced the Electrode Type Level Gauge for high pressure and temperature.[First Generation].
03 Export promotion to South-East Asia counturies [Thailand, Singapore & Taiwan, etc..].

1996~1997

1997. 08 Acquirement of ISO 9001.
08 Registration as a qualified supplier at Korea Electric Power Corporation.
06 Designated as a promising manufacturer by industrial Bank of Korea.
05 1) Pass of the Quality Test for Level Gauge by the government agency, Korea Machinery, Meter and Petrochemical Test and Research Institute.
2) Awarded a prize of Korea Science & Technology Minister.
1996. 11 Acquired the Certificate of Electrical Apparatus for Explosive Atmospheres for Level Switches & Transmitters by Korea Industrial Safety Corporation.
10 Movement into new factory premise, Incheon, Korea.

1979~1991

1991. 11 Registered as Member of Association of Foreign Trading Agents of Korea.
08 Re-established & Reorganized the company structure, changing corporate name " **SAM IL INDUSTRY CO.,LTD.**"
1987. 05 Began manufacturing flow elements.
1985. 10 Began exports of manufacture to abroad.
1984. 10 Installed the high pressure test equipment in the factory.
1982. 04 First Production of Bi-Color Type Level Gauge.
1980. 01 First Production of Sight Glass.
1979. 08 First Production of Level Gauge for High Pressure Boiler.
08 Foundation of SAM IL INDUSTRY CO.[-Started as a manufacturing firm that developed & manufactured the level gauges.]

CERTIFICATE

SAM IL INDUSTRY CO.,LTD.



TÜV CERT

CERTIFICATE

The TÜV CERT Certification Body
of TÜV Industrie Service GmbH
TÜV Rheinland Group
certifies in accordance with
TÜV CERT procedures that

Samil Industry Co., Ltd.
44B-12L, 434-12, Nonhyun-dong, Namdong-gu, Incheon 405-848, Korea

has established and applies a quality management system for

Design, Development, Manufacturing, Sales and
Servicing of Flow Elements and Level Gauges

An audit was performed, Report No. 028990.
Proof has been furnished that the requirements according to

DIN EN ISO 9001:2000

are fulfilled.
The certificate is valid until 2008-08-31.
Certificate Registration No. 01 100 028990

Hong Kong, 2005-10-12
First certification 2002

TÜV Rheinland Group

TÜV CERT Certification Body of
TÜV Industrie Service GmbH

www.tuv.com

QUALITY MANAGEMENT SYSTEM ISO 9001



TÜV CERT

TÜV Rheinland Group

CERTIFICATE

Quality-Assurance System

acc. to European Directive 97/23/EC

Certificate No.: 01 202 ROK/Q-02 0015

Name and address of manufacturer:	SAMIL INDUSTRY CO.,LTD #44B-12L, 434-12, NONHYUN-DONG, NAMDONG-KU, INCHON, KOREA

The TÜV CERT Certification Body for Pressure Equipment hereby certifies that the above - mentioned manufacturer operates a quality system according to the European Directive 97/23/EC. The manufacturer has the permission to affix the following CE marking to pressure equipment described and manufactured in accordance to the scope covered by this Quality-Assurance System:

CE 0035

Approved acc. to Directive 97/23/EC:	QA-System (Module H) The QS Modules D1, E, D1 and D of the Directive are performed by Module H
Audit Report No.:	ROK/Q-02 0015
Scope:	Design and manufacturing of liquid level gages, magnet float level gages and flow element
Plant:	SAMIL INDUSTRY CO.,LTD #44B-12L, 434-12, NONHYUN-DONG, NAMDONG-KU, INCHON, KOREA
Valid until:	September 2008

Cologne, November 04 , 2005

TÜV CERT-Certification Body
for Pressure Equipment
Dr.-Ing. W. Wichert
Notified Body, ID No. 0035

TÜV Industrie Service GmbH
Am Grauen Stein
51105 Köln
Tel. ++49-221/806-0
Fax. ++49-221/806-1354

Member of CECC

CE MARK FOR PED

EXPLOSION -PROOF



KOSHA

Certificate of Approval

LABORATORY

TÜV Rheinland

CERTIFICATE

of Conformity

OSHA

Certificate of Approval

TÜV Rheinland Product Safety GmbH - Am Grauen Stein - D-51105 Köln

CE MARK FOR ILLUMINATOR

LEVEL SWITCH

TWO-COLOR ILLUMINATOR

SEL : MPU

ILLUMINATOR

HOW TO SELECT LIQ
[FOR SERIES :

SAM IL INDUSTRY CO.,LTD.

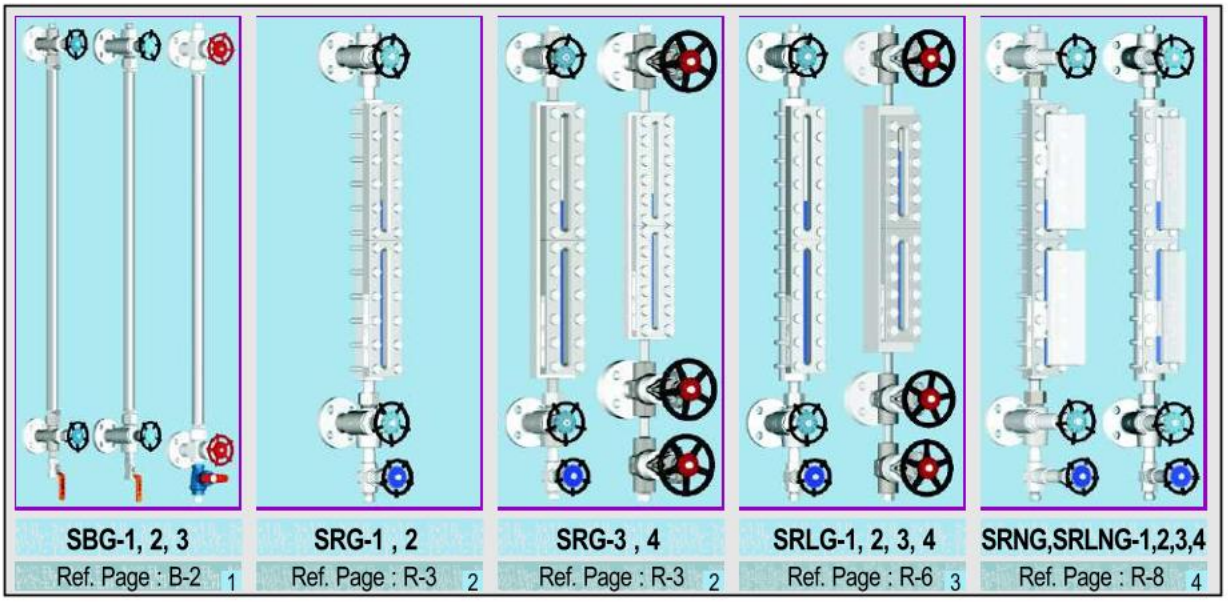

SBG-1, 2, 3	SRG-1 , 2	SRG-3 , 4	SRLG-1, 2, 3, 4	SRNG,SRLNG-1,2,3,4
Ref. Page : B-2 1	Ref. Page : R-3 2	Ref. Page : R-3 2	Ref. Page : R-6 3	Ref. Page : R-8 4

TYPE	MODEL	Class	Standard Gauge V/v [Ref. Page G-9]	MATERIALS					
				Gauge Valve		Gauge Body		Shield	Bolt
Tubular 1	SBG	1 2 3	SS SO SS	C.S, Stainless Steel PVC, PP, Teflon	◉	Glass Tube, PFA Tube PVC, PP, Teflon	◉	×	×
Basic Models 2	SRG	1 2 3 4	SS, SO, SB SW	C.S, Stainless Steel	◉	C.S, Stainless Steel	◉	×	A193 Gr. B7 ◉
Large Chamber 3	SRLG	1 2 3 4	SS, SO, SB SW	C.S, Stainless Steel	◉	C.S, Stainless Steel	◉	×	A193 Gr. B7 ◉
Non - Frosting [Frost - Free] 4	SRNG SRLNG	1 2 3 4	SS, SO, SB SW	C.S, Stainless Steel	◉	C.S, Stainless Steel	◉	×	A193 Gr. B7 ◉
Jacket [Heating&Cooling] 5	SRJG SRLJG	1 2 3 4	SS, SO, SB SW	C.S, Stainless Steel	◉	C.S, Stainless Steel	◉	×	A193 Gr. B7 ◉
Zig - Zag 6	SRZG	1 2 3 4	SS, SO, SB SW	C.S, Stainless Steel	◉	C.S, Stainless Steel	◉	×	A193 Gr. B7 ◉
Lined 7	SRG-LD SRLG-LD	1	× On Request [Plug Valve]	×	◉	C.S, Stainless Steel [Lining : Teflon Hard Rubber]	◉	×	A193 Gr. B7 ◉
Illuminator 8	SRG-IL	1 2 3 4	SS, SO, SB SW	C.S, Stainless Steel	◉	C.S, Stainless Steel	◉	×	A193 Gr. B7 ◉
Bi - Color 9	SRG-BC	1 2	SS, SO, SB	C.S, Stainless Steel	◉	C.S, Stainless Steel	◉	×	A193 Gr. B7 ◉
Self Closing 9	SRG-1SM	1	Self Closing Type	Bronze	◉	Stainless Steel	◉	×	A193 Gr. B7 ◉

Symbols ◉ Other materials requested by customer
× Not Used

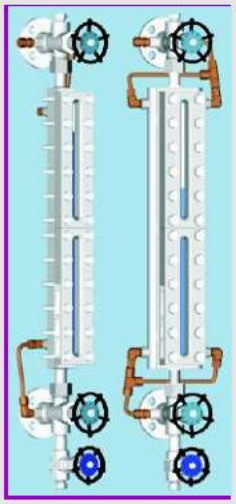

SRJG,SRLJG-1,2,3,4
5 Ref. Page : R-10

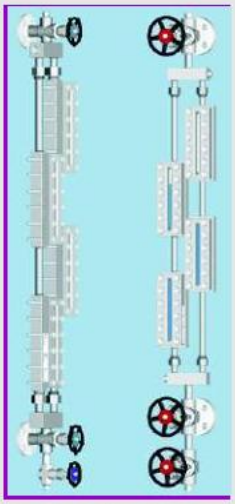

SRZG-1, 2, 3, 4
6 Ref. Page : R-12

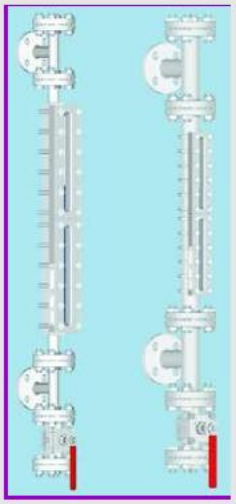

SRG,SRLG-LD
7 Ref. Page : R-16

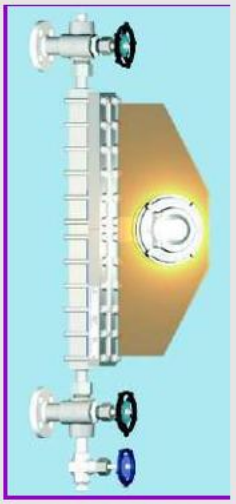

SRG-IL
8 Ref. Page : R-20



SRG-1,2BC/SRG-1SM
9 Ref. Page : R-18/R-20

APPLICATIONS AND FEATURES	PRESSURE AND TEMPERATURE RATING
Light weighted and simply designed level gauge for low pressure and temperature. made of a Glass tube or **PFA** hose which liquid level can be observed.	◈ Max. working pressure will be decreased due to increasing of the temperature.
Used for observing various liquids by refractive index of light and for high pressure and high temperature excepting steam service.	
Used for easy level reading of foamy liquids with larger volume of the liquid chamber will be reduced bubbling and suitable for highly dens, viscous liquids.	
Used for extremely low-temperature applications. The acrylic non-frosting plate window is mounted in front of the gauge and there will observe the level easily far better.	
Suitable for reading the level of highly congealable or ebullient liquids. equipped with jacket line to inflow a steam for congealable liquids and a cold media for ebullient liquids through it.	
The most advantage of this type have no invisible sections [=dead band]. and our standard overlapped section is ten [10]mm as minimum.	
Suitable for observing any corrosive liquids by lining or coating all parts to contact with liquids.	
Reflex type with illuminator is useful for observing the fluid in a dim place or at night.	
Used with a special reflex type gauge glass which has V-shaped single refractive groove and red coating on the outside all of the glass. Easy level reading.	
Used for observing the fluid of oil tank for ship and it's light weight rather than typical level gauge for land.	

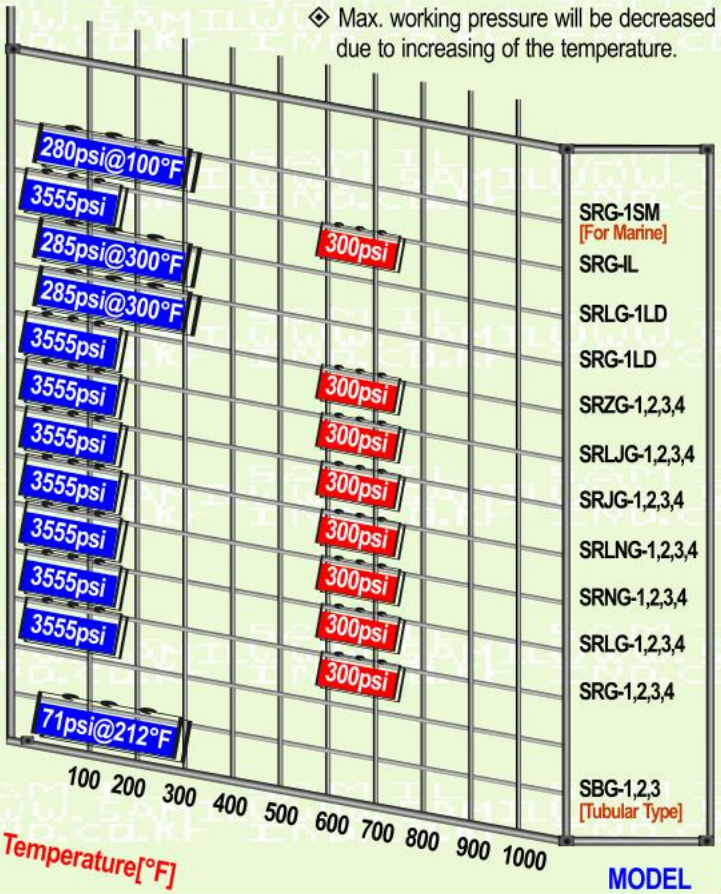

HOW TO SELECT LIQ
[FOR SERIES : TRANS

SAM IL INDUSTRY CO.,LTD.



STG-1 , 2
Ref. Page : T-3 1

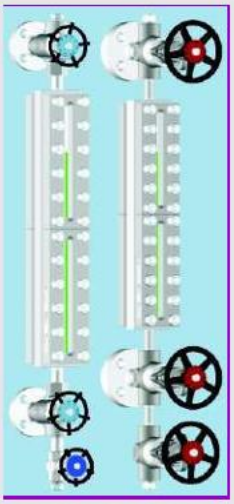

STG-3 , 4
Ref. Page : T-3 1

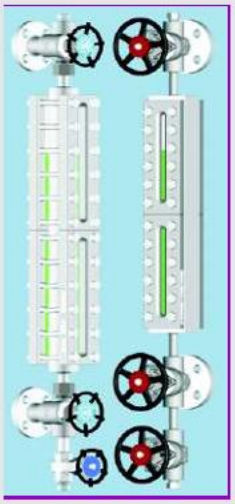

STLG-1 , 2 , 3 , 4
Ref. Page : T-6 2

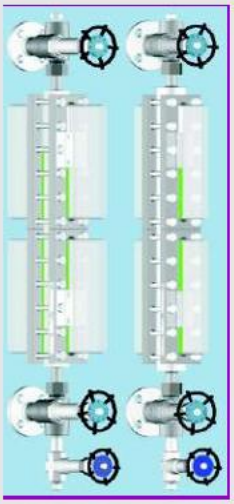

STNG,STLNG-1,2,3,4
Ref. Page : T-8 3



STJG,STLJG-1,2,3,4
Ref. Page : T-10 4

TYPE	MODEL	Class	Standard Gauge V/v [Ref. Page G-9]	MATERIALS					
				Gauge Valve		Gauge Body		Shield	Bolt
Basic Models 1	STG	1 2 3	SS, SO, SB	C.S, Stainless Steel	◉	C.S, Stainless Steel	◉	× O	A193 Gr. B7
		4	SW					MICA	◉
Large Chamber 2	STLG	1 2 3	SS, SO, SB	C.S, Stainless Steel	◉	C.S, Stainless Steel	◉	× O	A193 Gr. B7
		4	SW					MICA	◉
Non - Frosting [Frost - Free] 3	STNG STLNG	1 2 3	SS, SO, SB	C.S, Stainless Steel	◉	C.S, Stainless Steel	◉	× O	A193 Gr. B7
		4	SW					MICA	◉
Jacket [Heating&Cooling] 4	STJG STLJG	1 2 3	SS, SO, SB	C.S, Stainless Steel	◉	C.S, Stainless Steel	◉	× O	A193 Gr. B7
		4	SW					MICA	◉
Zig - Zag 5	STZG	1 2 3	SS, SO, SB	C.S, Stainless Steel	◉	C.S, Stainless Steel	◉	× O	A193 Gr. B7
		4	SW					MICA	◉
Lined 6	STG-LD STLG-LD	1	× On Request [Plug Valve]	×	◉	C.S, Stainless Steel [Lining : Teflon Hard Rubber]	◉	×	A193 Gr. B7 ◉
Illuminator 7	STG-IL	1 2 3	SS, SO, SB	C.S, Stainless Steel	◉	C.S, Stainless Steel	◉	× O	A193 Gr. B7
		4	SW					MICA	◉
Bi - Color 8	STG-BC	1 2	SS, SO, SB	C.S, Stainless Steel	◉	C.S, Stainless Steel	◉	×	A193 Gr. B7 ◉
Pad Gauge [Direct Welding] 9	SWPG	1 2	×	×	◉	Stainless Steel	◉	×	A193 Gr. B7 ◉

Symbols ◉ Other materials requested by customer
O Available on requesting × Not Used

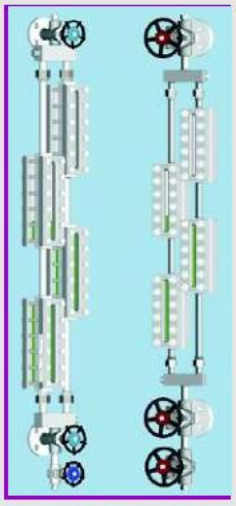

STZG-1 , 2 , 3 , 4
5 Ref. Page : T-12

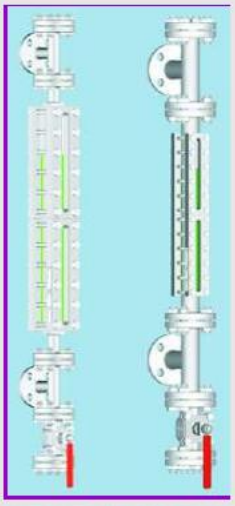

STG,STLG-LD
6 Ref. Page : T-16

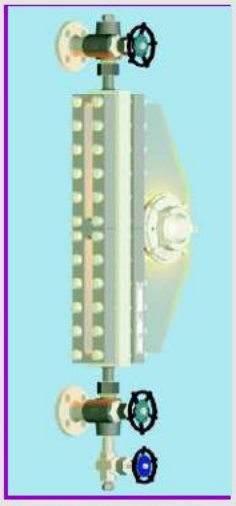

STG-IL
7 Ref. Page : T-20

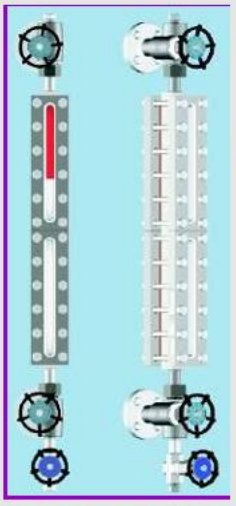

STG-BC
8 Ref. Page : T-18

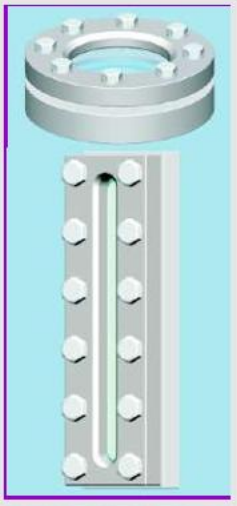

SWPG-1 , 2
9 Ref. Page : T-22

APPLICATIONS AND FEATURES	PRESSURE AND TEMPERATURE RATING
Used for observing the fluid for high pressure and high temperature including steam service and especially for steam line thru transmission of light.	
Used for easy level reading of foamy liquids with larger volume of the liquid chamber will be reduced bubbling and suitable for highly dens, viscous liquids.	
Used extremely low-temperature applications. the acrylic non-frosting plate window is mounted in front of the gauge and there will observe the level easily far better.	
Suitable for reading the level of highly congealable or ebullient liquids. equipped with jacket line to inflow a steam for congealable liquids and a cold media for ebullient liquids through it.	
The most advantage of this type have no invisible sections [=dead band]. and **SAM IL**'s standard overlapped section is ten [10] mm as minimum.	
Suitable for observing any corrosive liquids by lining or coating all parts to contact with liquids.	
Transparent type with illuminator is useful for observing the fluid in a dim place or at night.	
Used with a special reflex type gauge glass which has V-shaped single refractive groove and red coating on the outside all of the glass. Easy level reading.	
No cocks or valves can be fitted between vessel and gauge because gauge bodies are made suitable for welding directly to the vessel. also can be designed various as a regular square and an oval form, etc.	

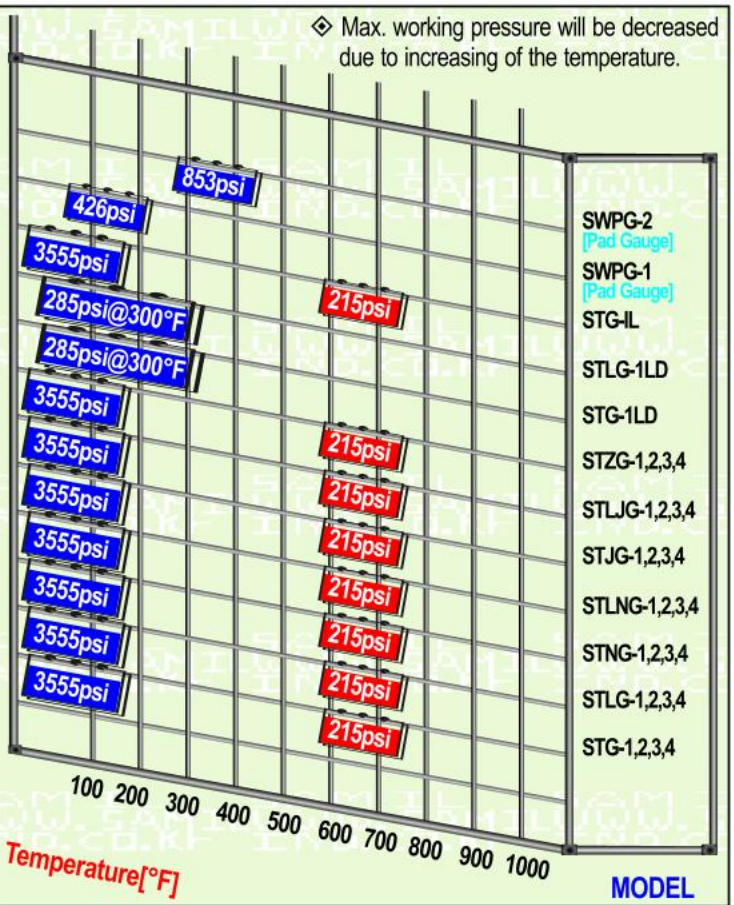

CONTENTS

VOLUME-1

CHAPTER-1 GENERAL ---------- G-1~G-12

INTRODUCTION ---------- G-2
CLASSIFICATION OF MODEL ---------- G-4
USEFUL DATA FOR ORDERING ---------- G-5

CHAPTER-2 TUBULAR GAUGE SERIES ---------- B-1~B-4

SBG ---------- B-2

CHAPTER-3 REFLEX GAUGE SERIES ---------- R-1~R-22

SRG ---------- R-3
SRLG ---------- R-6
SRNG,SRLNG ---------- R-8
SRJG,SRLJG ---------- R-10
SRZG ---------- R-12
SRG-LD, SRLG-LD ---------- R-16
SRG-BC ---------- R-18
SRG-IL ---------- R-20
SRG-1SM ---------- R-22

CHAPTER-4 TRANSPARENT GAUGE SERIES ---------- T-1~T-23

STG ---------- T-3
STLG ---------- T-6
STNG,STLNG ---------- T-8
STJG,STLJG ---------- T-10
STZG ---------- T-12
STG-LD,STLG-LD ---------- T-16
STG-BC ---------- T-18
STG-IL ---------- T-20
SWPG ---------- T-22

VOLUME-2

CHAPTER-5 BOILER WATER GAUGE SERIES ---------- BW-1~BW-19& E-1~E-12

SRG-B ---------- BW-3
STG-B ---------- BW-5
SGC-B ---------- BW-9
Separated Volume SEL SERIES ---------- E-1

VOLUME-3

CHAPTER-6 MAGNETIC FLOAT GAUGE SERIES ---------- M1~M9

SMF-50A, 65A ---------- M-4
SMF-50AN ---------- M-5
SMF-50AJ ---------- M-5
SMF-50ALD ---------- M-6
SMF-50AU ---------- M-6

VOLUME-4

APPENDIX MATERIALS & CHEMICAL RESISTANCE ---------- C1~C19

TABLE OF CHEMICAL RESISTANCE ---------- C2

CHAPTER– 1

GENERAL

INTRODUCTION
CLASSIFICATION OF MODEL
USEFUL DATA FOR ORDERING

IN THIS CHAPTER-1

You can see overall system of plant through the introduction and select the most useful model on process conditions. you can also find items fit in with your purpose and the useful data for ordering are an important data wherever you have placing an order for level gauges.

LEVEL TECHNOLOGIES..



GREETING

Since **SAM IL** has been established in 1979, our venture and search for an excellence of the best are being continued unendingly. We are firmly persevere in our efforts to ceaseless managerial innovation and technical development, so that we can not only serve present needs but also break in to new possibilities.
Forwarding next generation, we will continue to pursue such technological innovations as well as human resource development under a corporate philosophy that focuses on "**To Customer The Best Quality and Customer Oriented**" for our valuable customers.

DESIGN VERIFICATION

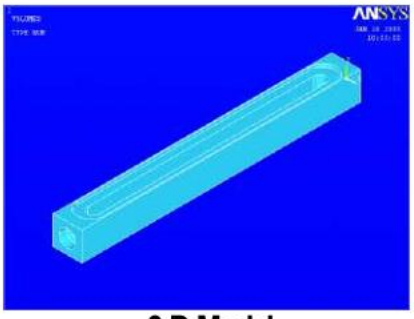

3-D Model

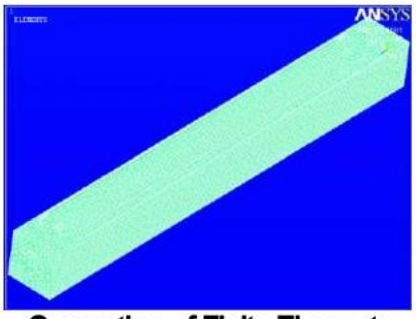

Generation of Finite Elements

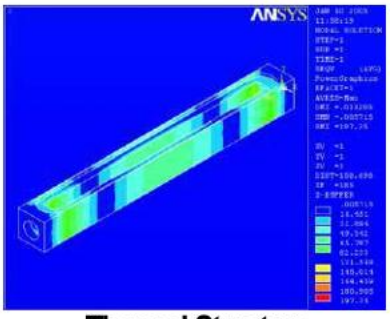

Thermal-Structure
Coupled-Field Analysis

QUALITY ASSURANCE

As the best authorized leader of the Level Gauge Company in domestic and overseas, all parts of the plant are systematical and effective advanced items; and, in particular higher quality for a safety operating is especially emphasized in the management, designs, materials and fabrications. We are always ready to fulfill any order to be request by valuable customers on the basis of our much experience and accumulated technologies.
SAM IL'**s** Level Gauges have been proven its quality in the world because we had been acquired **ISO-9001** and **CE-Certificate** for PED from TUV Rheinland Group.

FABRICATION VERIFICATION



PMI [Positive Material Identification]



Hydrostatic



Dimensional

This DOC is for CE marked products only in full accordance with Pressure Equipment Directive[PED]

[ANNEX 10 : DECLARATION OF CONFORMITY]

DECLARATION OF CONFORMITY
THE PRESSURE EQUIPMENT DIRECTIVE

Name and Address of Manufacturer within the European Community

SAM IL INDUSTRY CO.,LTD.
#434-12, 44BL-12LT, NON HYUN-DONG, NAMDONG-GU,
INCHEON, KOREA. ZIP CODE : 405-848

Description of Pressure Equipment

LEVEL GAUGE PRESSURIZED MAX. WORKING PRESSURE 71psig ~ 4978 psig

MODEL : Level Gauge All Items.

Conformity Assessment Procedure Followed :

MODULE [H] : FULL QUALITY ASSURANCE

Name and Address of the Notified Body which carried out the inspection

NOT APPROPRIATE

Reference of the

EC Type Examination Certificate	NOT APPROPRIATE
EC Design Examination Certificate	NOT APPROPRIATE
EC Certificate of Conformity	NOT APPROPRIATE

Name and Address of the Notified Body Monitoring the Manufacturer's Quality Assurance System

TUV Anlagentechnik GmbH.
Am Grauen Stein, D-51101 Cologne / Germany.

References of Harmonised Standards used :

NOT APPROPRIATE

References of Other Technical Standards and Specifications used.

ASME BOILER & PRESSURE VESSEL CODE-1998, Ⅰ, Ⅱ, Ⅳ, Ⅶ, Ⅷ.

ANSI / ASME B16.34-1988	ASME B31.1-1998	ANSI B16.5-FLANGES.
		CUSTOMER TECH. SPEC.

References of Other European Directives used :

CE-MARKING - 97/23/EC

Authorised Person for the Manufacturer within the European Community

Name/Signature Kue Tae, Choi / DATE 09. Dep. 2002
QUALITY ASSURANCE CHIEF

CLASSIFICATIOIN

SRG is the Reflex Type and classified as 1,2,3 & 4 according to the class of Max. working pressure and temperature.
STG is the Transparent Type and classified as 1,2,3 & 4 due to the class of Max. working pressure & temperature.

When you have placing an order for the level gauge, you can select the model and the class should be decided by **SAM IL**.

REFLEX GAUGE SERIES

Unit : psig[kgf/cm^{2}g]

Model	Class	Max. Working Pressure @ 100 °F [38 °C]	Hydrostatic Test
SRG	1	569 [40]	Max. Working Pressure x 1.5 or Design Pressure x 1.2, Whichever is the greater [Only CE marked products will in accordance with clause 7.4 at Pressure Equipment Directive : PED]
	2	853 [60]	
	3	1422 [100]	
	4	3555 [250]	
SRLG	1	285 [20]	
	2	569 [40]	
	3	1422 [100]	
	4	3555 [250]	
SRNG	1	569 [40]	
	2	853 [60]	
	3	1422 [100]	
	4	3555 [250]	
SRLNG	1	285 [20]	
	2	569 [40]	
	3	1422 [100]	
	4	3555 [250]	
SRJG	1	569 [40]	
	2	853 [60]	
	3	1422 [100]	
	4	3555 [250]	
SRLJG	1	285 [20]	
	2	569 [40]	
	3	1422 [100]	
	4	3555 [250]	
SRZG	1	569 [40]	
	2	853 [60]	
	3	1422 [100]	
	4	3555 [250]	
SRG-LD SRLG-LD	1	285 [20]	
SRG-BC	1	285 [20]	
	2	569 [40]	

S : SAM IL R : REFLEX T : TRANSPARENT
J : JACKET Z : ZIG-ZAG LD : LINED

TRANSPARENT GAUGE SERIES

Unit : psig[kgf/cm^{2}g]

Model	Class	Max. Working Pressure @ 100 °F [38 °C]	Hydrostatic Test
STG	1	285 [20]	Max. Working Pressure x 1.5 or Design Pressure x 1.2, Whichever is the greater [Only CE marked products will in accordance with clause 7.4 at Pressure Equipment Directive : PED]
	2	569 [40]	
	3	1422 [100]	
	4	3555 [250]	
STLG	1	285 [20]	
	2	569 [40]	
	3	1422 [100]	
	4	3555 [250]	
STNG	1	285 [20]	
	2	569 [40]	
	3	1422 [100]	
	4	3555 [250]	
STLNG	1	285 [20]	
	2	569 [40]	
	3	1422 [100]	
	4	3555 [250]	
STJG	1	285 [20]	
	2	569 [40]	
	3	1422 [100]	
	4	3555 [250]	
STLJG	1	285 [20]	
	2	569 [40]	
	3	1422 [100]	
	4	3555 [250]	
STZG	1	285 [20]	
	2	569 [40]	
	3	1422 [100]	
	4	3555 [250]	
STG-LD STLG-LD	1	285 [20]	
STG-BC	1	285 [20]	
	2	569 [40]	

G : GAUGE L : LARGE CHAMBER
BC : BI-COLOR N : NON-FROSTING

DIMENSIONS

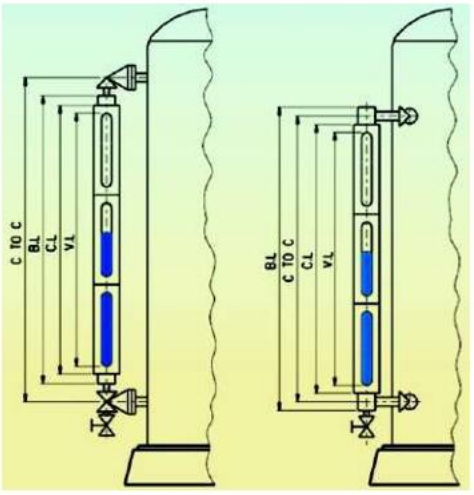

As standard, dimensions of **SAM IL** direct reading gauges are determined according to the following Nomenclature and it may be changed to fit in with Customer's requirements.

NOMENCLATURE :

- **C to C** : Center to Center
- **B·L** : Gauge Body Length
- **C·L** : Gauge Cover Length
- **V·L** : Visible Length

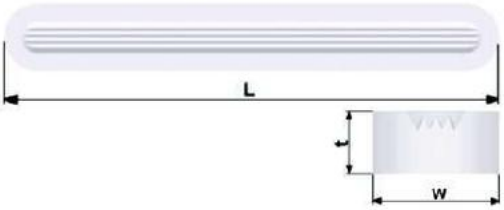

GLASS SIZE

No.	L	w	t	No.	L	w	t
1	115	34	17	6	250	34	17
2	140	34	17	7	280	34	17
3	165	34	17	S7	300	34	17
4	190	34	17	8	320	34	17
S4	200	34	17	9	340	34	17
5	220	34	17	10	400	34	17

Glass Size x No. of Sec.	V·L	C·L	B·L		C TO C		Approx. Weight W/o Valves [kg]	Glass Size x No. of Sec.	V·L	C·L	B·L		C TO C		Approx. Weight W/o Valves [kg]
			TB	SS	TB	SS					TB	SS	TB	SS	
#1 x 1	90	130	145	200	320	140	4	#10x3	1205	1245	1260	1315	1435	1255	33.5
#2 x 1	115	155	170	225	345	165	4.5	#7 x 4	1140	1180	1195	1250	1370	1190	32
#3 x 1	140	180	195	250	370	190	5	#S7x4	1220	1260	1275	1330	1450	1270	34
#4 x 1	165	205	220	275	395	215	5.5	#8 x 4	1300	1340	1355	1410	1530	1350	36
#S4x1	175	215	230	285	405	225	6.5	#9 x 4	1380	1420	1435	1490	1610	1430	39.5
#5 x 1	195	235	250	305	425	245	7	#10x4	1620	1660	1675	1730	1850	1670	45
#6 x 1	225	265	280	335	455	275	7.5	#7 x 5	1435	1475	1490	1545	1665	1485	40
#7 x 1	255	295	310	365	485	305	8	#S7x5	1535	1575	1590	1645	1765	1585	42.5
#S7x1	275	315	330	385	505	325	8.5	#8 x 5	1635	1675	1690	1745	1865	1685	45
#8 x 1	295	335	350	405	525	345	9	#9 x 5	1735	1775	1790	1845	1965	1785	49
#9 x 1	315	355	370	425	545	365	9.5	#10x5	2035	2075	2090	2145	2265	2085	56.5
#10x1	375	415	430	485	605	425	10.5	#7 x 6	1730	1770	1785	1840	1960	1780	48
#4 x 2	390	430	445	500	620	440	12.5	#S7x6	1850	1890	1905	1960	2080	1900	51
#5 x 2	430	470	485	540	660	480	13.5	#8 x 6	1970	2010	2025	2080	2200	2020	54
#6 x 2	490	530	545	600	720	540	15	#9 x 6	2090	2130	2145	2200	2320	2140	58.5
#7 x 2	550	590	605	660	780	600	16	#10x6	2450	2490	2505	2560	2680	2500	68
#S7x2	590	630	645	700	820	640	17	#7 x 7	2025	2065	2080	2135	2255	2075	56
#8 x 2	630	670	685	740	860	680	18	#S7x7	2165	2205	2220	2275	2395	2215	59.5
#9 x 2	670	710	725	780	900	720	19	#8 x 7	2305	2345	2360	2415	2535	2355	63
#10x2	790	830	845	900	1020	840	22	#9 x 7	2445	2485	2500	2555	2675	2495	68
#6 x 3	755	795	810	865	985	805	22.5	#10x7	2865	2905	2920	2975	3095	2915	79.5
#7 x 3	845	885	900	955	1075	895	24	#7 x 8	2320	2360	2375	2430	2550	2370	64
#S7x3	905	945	960	1015	1135	955	25.5	#S7x8	2480	2520	2535	2590	2710	2530	68
#8 x 3	965	1005	1020	1075	1195	1015	27	#8 x 8	2640	2680	2695	2750	2870	2690	72
#9 x 3	1025	1065	1080	1135	1255	1075	30	#9 x 8	2800	2840	2855	2910	3030	2850	77.5

SUPPORTER FITTING

We recommend this supporter fittings for gauges over 2000mm long for STG-3 & 4 and 3000mm for SRG-3 & 4 Models.

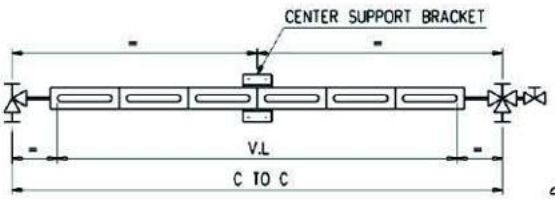

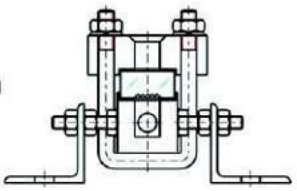

The supporter fitting shown are available on notify the instructions to us by referring to the above illustration.

CODES FOR HOOK-UP

Hook Up of **SAM IL** direct reading gauges are standardized to the following fifteen[15] codes and Non-Standard Hook-Up procedures are available on request. Unless it is specified, Right Connected Hook-Up will be selected as a standards. Thus, when you have placing an order for the level gauges, it is important to indicate our Hook-Up code in order to do an exact design and manufacturing.

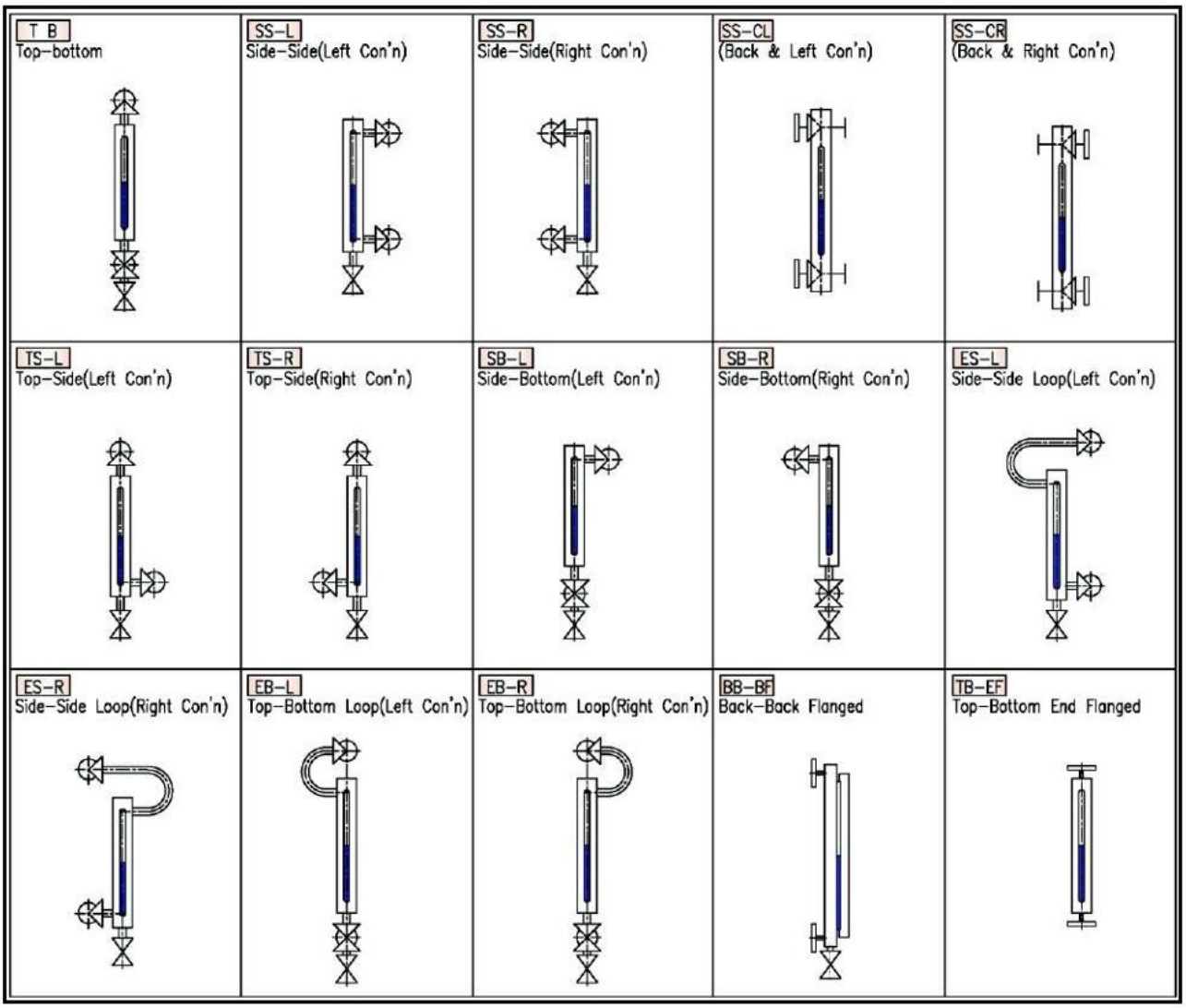

NOZZLE ORIENTATIONS

Nozzle Orientation of **SAM IL** direct reading gauges is coded every **45°** counter-clock-wise. Thus, specify the angle of direction [for example: **90°**], if any specific nozzle direction is requested inevitably. whenever its orientation not specified, Nozzle Direction of **180°** is selected.

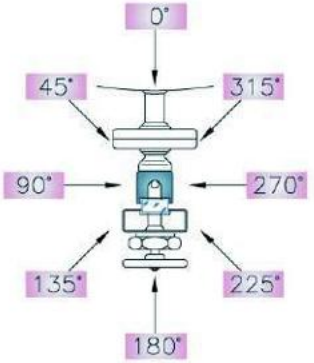

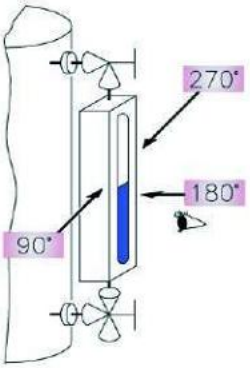

SECTIONAL VIEW : STRAIGHT TYPE

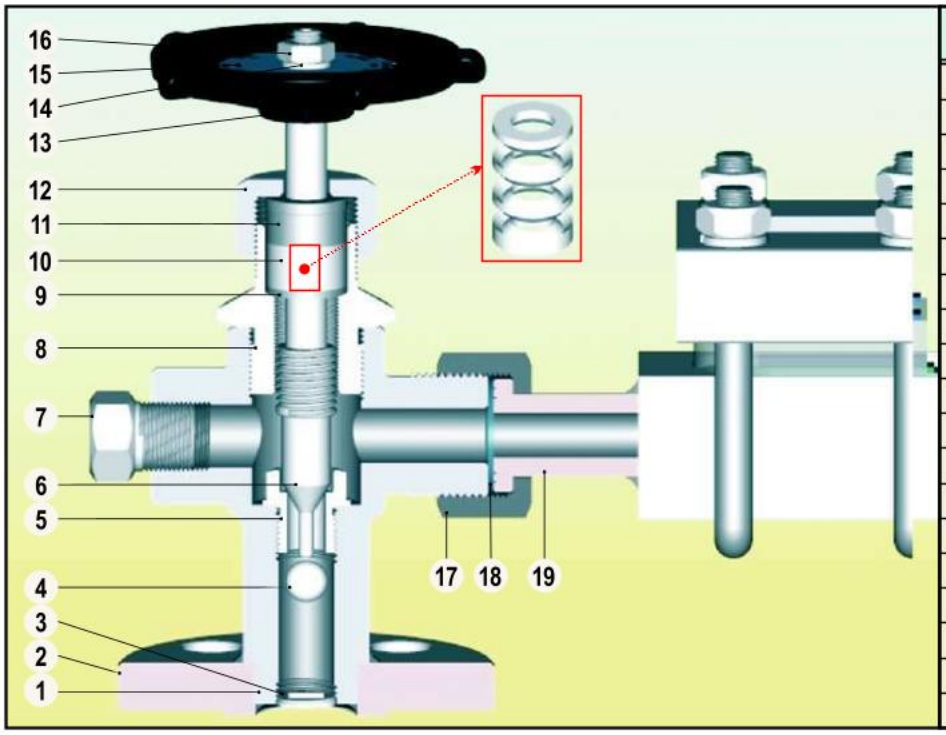

NO.	PARTS
1	Gauge Valve Body
2	Connection Flange
3	Retainer
4	Check Ball
5	Renewable Seat
6	Stem
7	Plug
8	Bonnet
9	Packing Ring
10	Gland Packing
11	Gland
12	Gland Nut
13	Hand Wheel
14	Washer
15	Name Plate
16	Nut
17	Connection Nut
18	Connection Gasket
19	Connection Nipple

SECTIONAL VIEW : OFF-SET TYPE

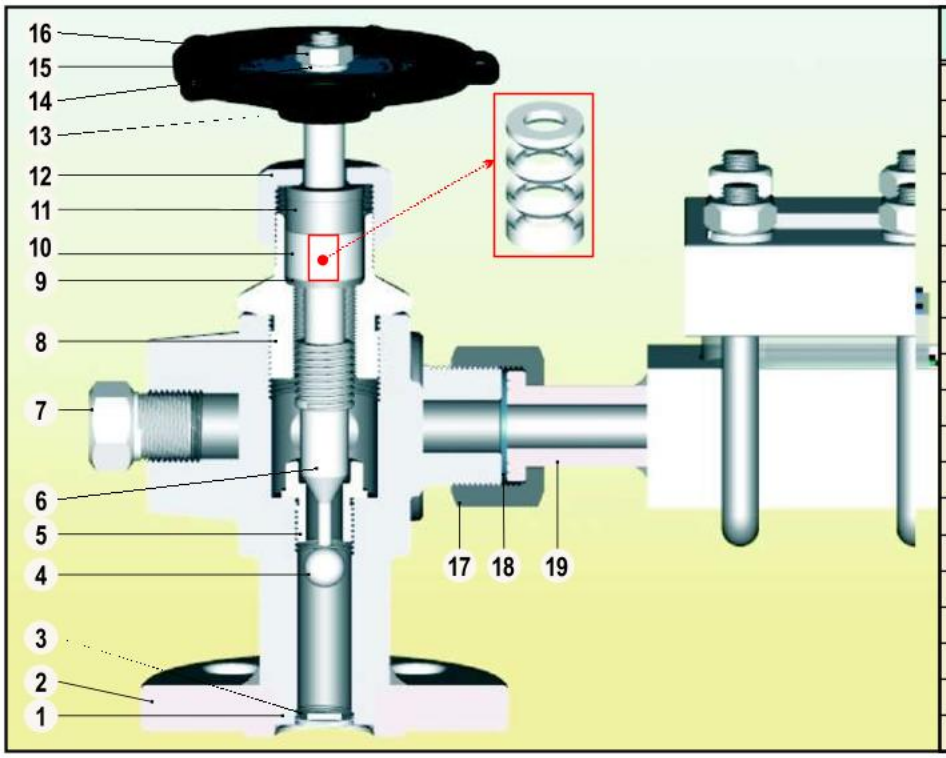

NO.	PARTS
1	Gauge Valve Body
2	Connection Flange
3	Retainer
4	Check Ball
5	Renewable Seat
6	Stem
7	Plug
8	Bonnet
9	Packing Ring
10	Gland Packing
11	Gland
12	Gland Nut
13	Hand Wheel
14	Washer
15	Name Plate
16	Nut
17	Connection Nut
18	Connection Gasket
19	Connection Nipple

SECTIONAL VIEW : BOLTED TYPE

NO.	PARTS
1	Gauge Valve Body
2	Connection Flange
3	Retainer
4	Check Ball
5	Renewable Seat
6	Stem
7	Plug
8	Gasket
9	Bonnet
10	Bonnet Bolt
11	Gland Packing
12	Gland Bolt Pin
13	Gland Bolt
14	Gland
15	Gland Flange
16	Gland Nut
17	Sleeve
18	Hand Wheel
19	Name Plate
20	Washer
21	Nut
22	Connection Nut
23	Connection Gasket
24	Connection Nipple

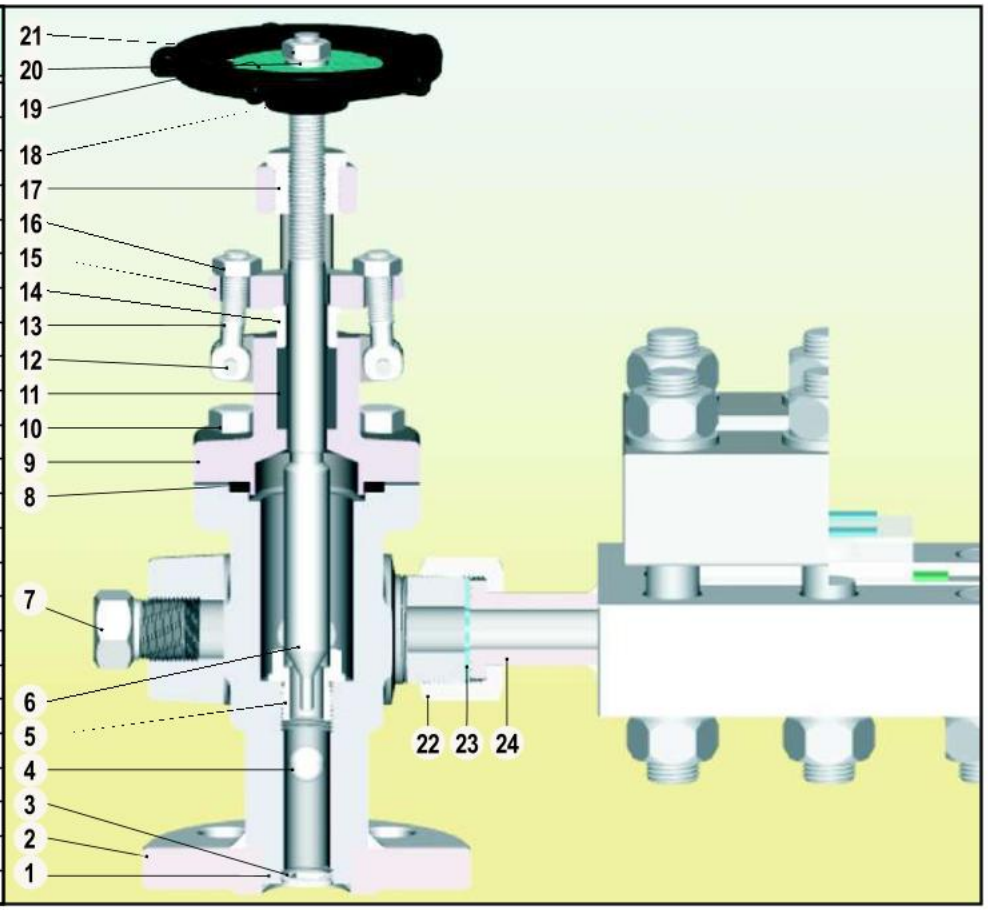

VALVE SEAT & CHECK BALL

RE-NEWABLE SEAT :
The most advantageous of this seat is easy to replace it as new one when the seat worn out.

CHECK BALL :
This is the safety device which automatically prevents spurting of the fluid in case the gauge glass is to be breakage during use.

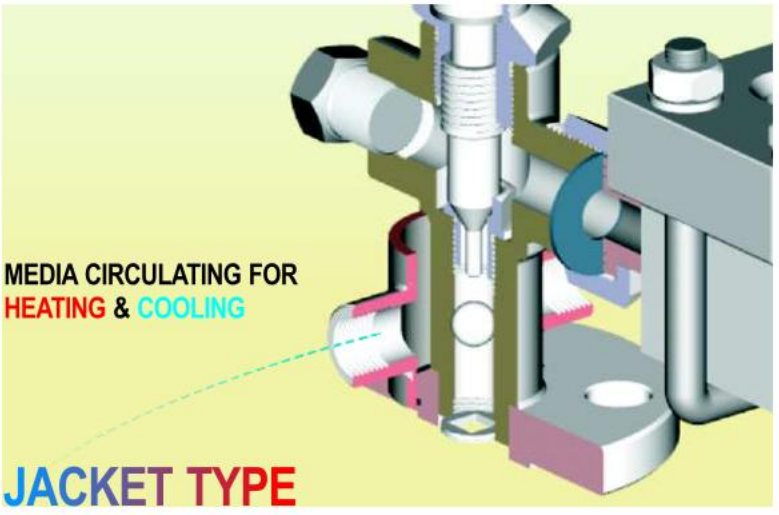

GAUGE CONNECTIONS



STRAIGHT TYPE
MODEL : SS



OFFSET-TYPE
MODEL : SO



BOLTED TYPE
MODEL : SB



SEAL WELDED TYPE
MODEL : SW

The Seal Welded Bonnet Type, as **SW** of these models will be used for 2500# and Over. Therefore, the model, **SW** will be used for Level Gauge of class-4, Those are **SRG-4** and **STG-4.** and also used for the model, **SGC-300B.**

OFFSET TYPE :

The off-set valve is crossed at apart 20mm between the center of the level gauge and center of the valve body. this design permits to clean and interior of the level gauge with the gauge valve closed.

GAUGE CONNECTIONS :

gauge connection of **SAM IL**'s direct reading gauge is coded according to the specification listed in the table.
"Gauge Connection" means how to connect them each other by nipple between the gauge body and valve.

CODE	GC-GC	GC-UC
Gauge Connection	Gland	Union
Orientation	360° Rotatable	360° Rotatable
Schematic Drawing	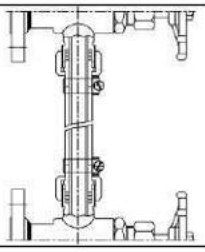	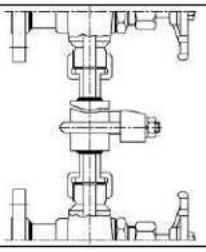
Applicable Models	SBG	SRG, STG
Remarks	Gland Packing [Non-Asbestos]	Free Adjustment of Nozzle Orientation at Site

CODE	GC-LC	GC-FC	GC-WC	GC-SC	GC-SUC
Gauge Connection	Expansion Loop & Weld Con'n	Flanged Con'n	Socket Welded Connection	Screwed Con'n	Spherical Union Connection
Orientation	Not Rotatable	Adjustable angle by Flange Hole	Not Rotatable	Not Rotatable	360° Rotatable
Schematic Drawing	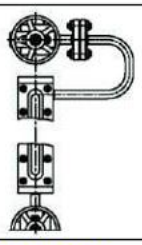	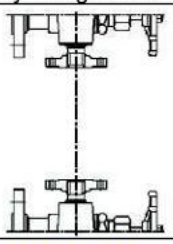	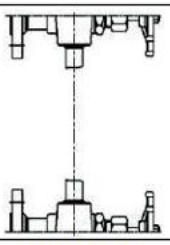	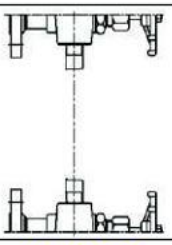	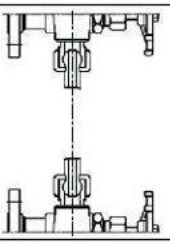
Applicable Models	SRG, STG	SRG, STG	SRG, STG	SRG, STG	SRG, STG
Remarks	Excellent compensation for thermal expansion	Gauge only Removable	Excellent Leak Prevention	Good Leak Prevention	fine adjustment of nozzle orientation, flange flatness and C to C

VESSEL CONNECTIONS

The connection of the **SAM IL** direct reading gauge is provided for vessels such as tanks, drums, etc. it is known as the vessel connection and standardized to meet various requirements.
When making an inquiry or placing an order, give the details of specification such as applicable standard, size, type, pressure rating, etc.
[Example : Size of Flanged or Screwed]

CODE and NOMENCLATURE

FL Flange Connection	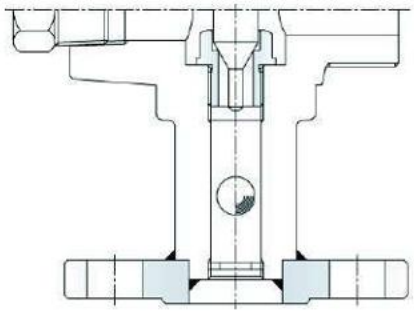	**US** Union and Screwed Connection	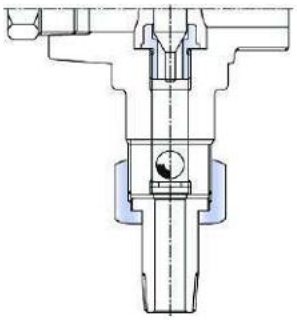
SF Spherical Union and Flanged Connection	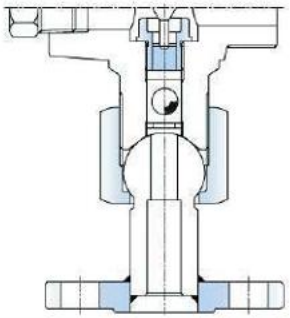	**SS** Spherical Union and Screwed Connection	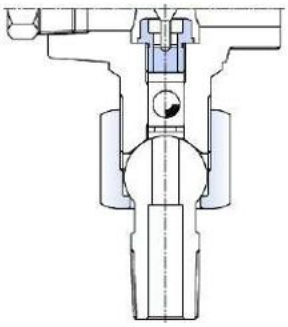
UF Union and Flanged Connection	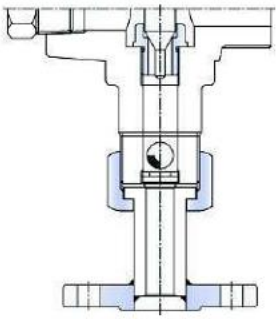	**SW** Socket Welded Connection	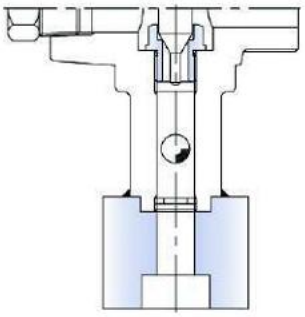
BS Body Solid Shank Connection	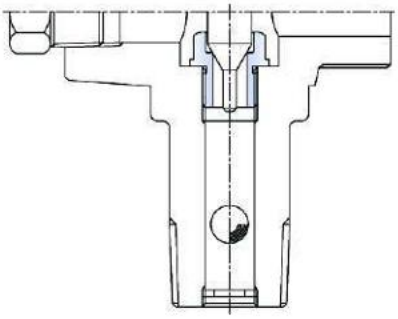	**OC** Other Connection	Special Connection on request by Customers.

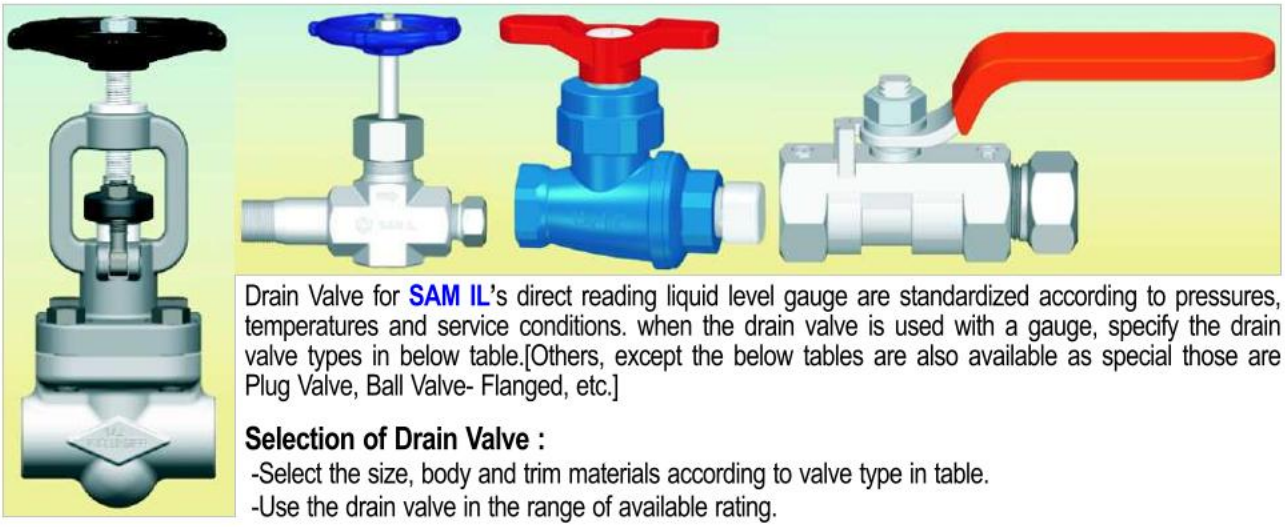

Drain Valve for **SAM IL**'s direct reading liquid level gauge are standardized according to pressures, temperatures and service conditions. when the drain valve is used with a gauge, specify the drain valve types in below table.[Others, except the below tables are also available as special those are Plug Valve, Ball Valve- Flanged, etc.]

Selection of Drain Valve :

-Select the size, body and trim materials according to valve type in table.

-Use the drain valve in the range of available rating.

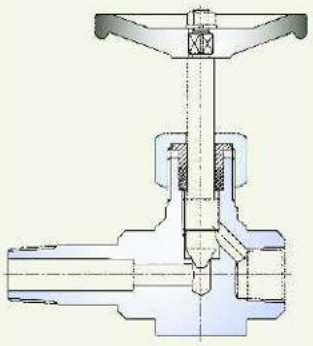

NEEDLE VALVE

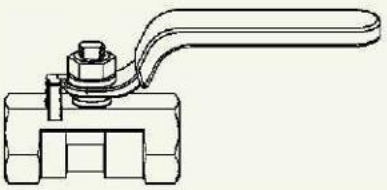

BALL VALVE

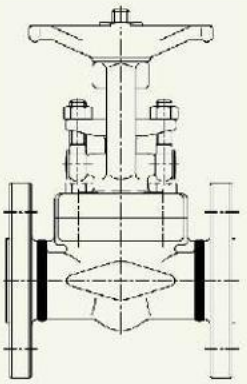

GATE- FLANGED
GLOBE- FLANGED

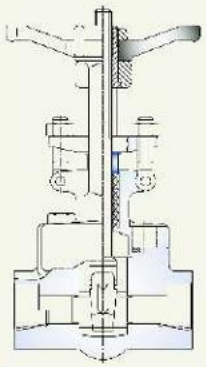

GATE VALVE
Screwed / Socket Welds

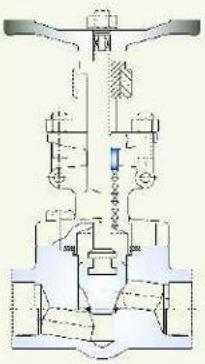

GLOBE VALVE
Screwed / Socket Welds

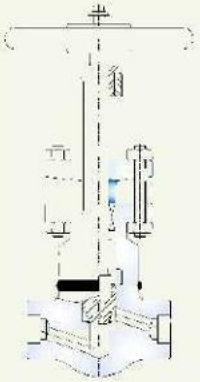

GLOBE VALVE
For High Pressure

DRAIN & END CONNECTIONS

When placing an order for the gauges, it is important absolutely to specify the end connection of the drain[or that of lower gauge valve if no drain valve is provided] correctly, as wrong specification will result in modifications being required.
Drain end connections tabulated are standardized to meet user needs.

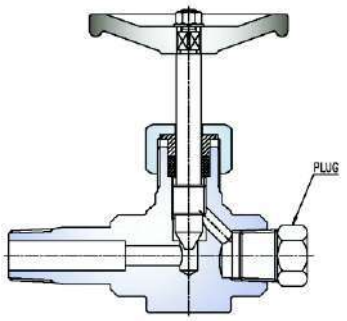

With Plug

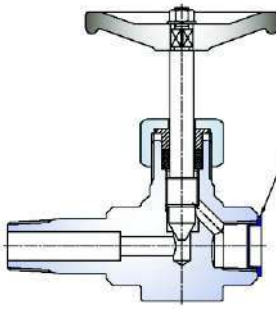

Unless It's specified, this is applied as a standard specifications.

Dust- Proof Plastic Cap Inserted

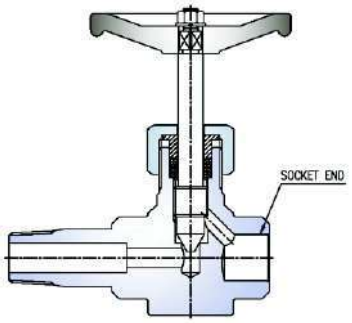

1/2"
3/4"
1"

Socket End

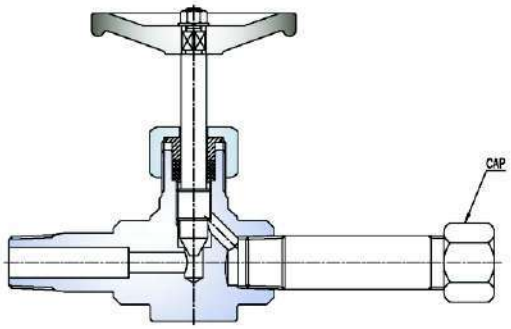

1/2"
3/4"
1"

With Nipple & Cap

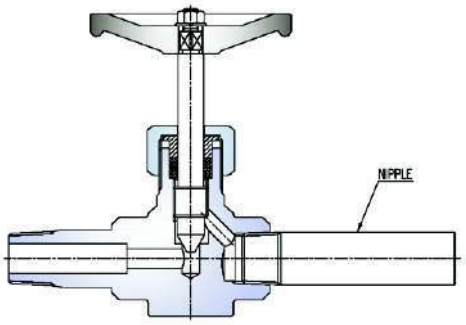

1/2"
3/4"
1"

Plain End or NPT[M]

With Nipple

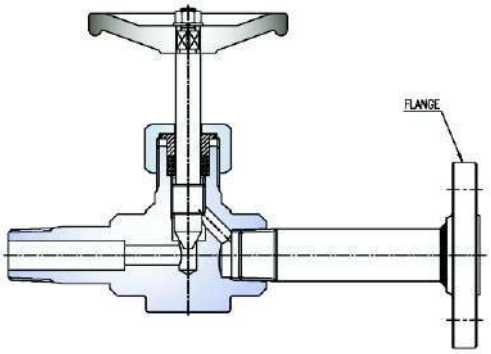

1/2"
3/4"
1"

With Nipple & Flange

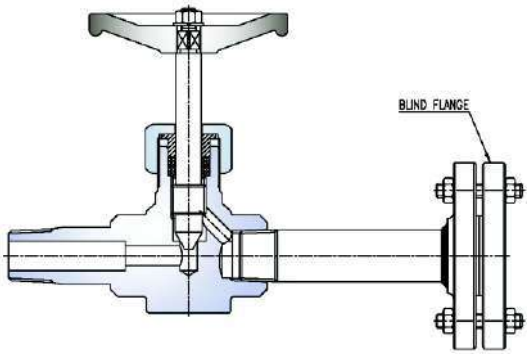

1/2"
3/4"
1"

With Nipple & Blind Flange

CHAPTER– 2

LIQUID LEVEL GAUGE

TUBULAR TYPE LEVEL GAUGE

IN THIS CHAPTER-2

Here is introduce basic information of the tubular type level gauge to use low pressure and temperature and you can see **SAM IL**'s standard **SBG** series.





GENERAL DESCRIPTION

The tubular type level gauge is the simplest shape of direct reading level apparatus for low pressure up to 71psi and maximum temperature of 212°F. the gauge glass is built in the protective tube. Check Balls inserted in the upper and lower valve to stop flow instantaneously when the glass is broken. the protector having a circular form is constructed to prevent glass breakage from external sources. for glass tube gauges only of center to center dimensions in excess of 2,000 mm, it's possible to manufacture any required C to C by using coupling in the middle of the gauge. Depending on nature of liquids, tubes made of various transparent PFA, Acrylic or Vinyl tube are also available. Tubular Glass with a linear red coating on the back is available to make level observation more clear.

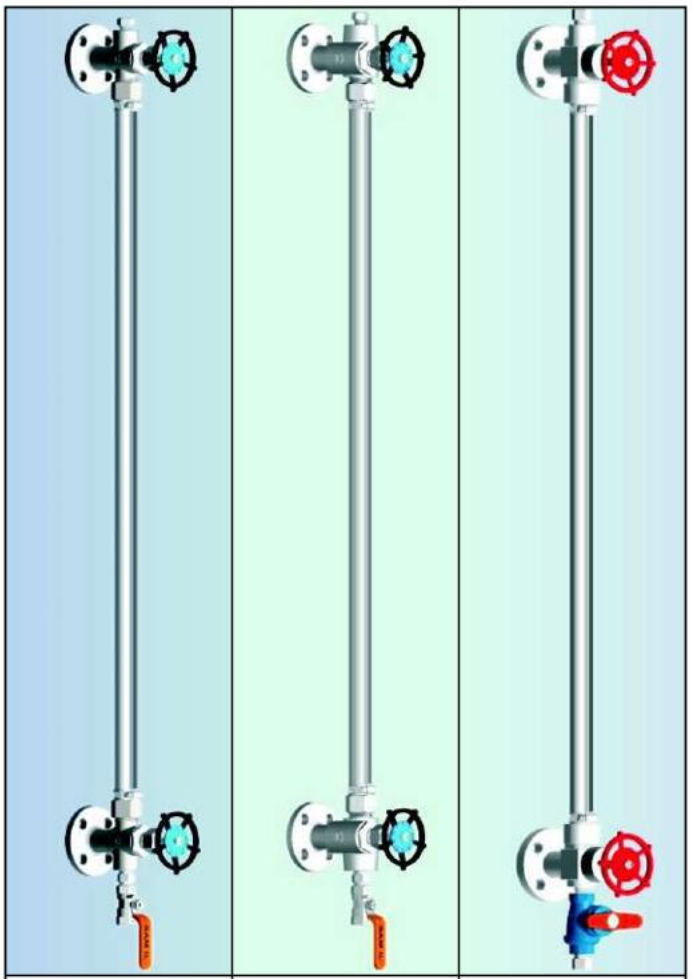

SBG-1	SBG-2	SBG-3
-Valve Mat'l : Carbon Steel & Stainless Steel	-Valve Mat'l : Carbon Steel & Stainless Steel	-Valve Mat'l : PVC , PP & TEFLON
-Valve Type : Straight Form	-Valve Type : Offset Form	-Valve Type : Straight Form
-Connection Size : 1/2", 3/4", 1"	-Connection Size : 1/2", 3/4", 1"	-Connection Size : 1/2", 3/4", 1"

SPECIFICATIONS

- Glass Tube Size : Out dia. =19 mm, In dia. =15 mm.
- Standard Vessel Connection : 3/4" ANSI 150# RF. Drain : NPT 1/2"
- Center to Center Length : 300 ~ 2000 mm.
- Glass Length : C to C - 35 mm.
  Hard Glass : 2000 mm[Max.]
- Max. Working Pressure : 71psi[=5 kg/cm^2-g]
- Max. Working Temperature : 212°F[=100°C]
- Shell Test Pressure : 100psi[=7 kg/cm^2-g]
- Optional Vessel Connection : As per customer's spec.

OPTIONS

TUBE.
- PFA TUBE [Transparent Teflon Series].
  : Size = Out dia. 16 mm & In dia. 14 mm.
  : C to C = 300 mm to 10,000 mm.

SCALE PLATE.
- Units : centi-meter[㎝], liter[ℓ] as standard and others are available.

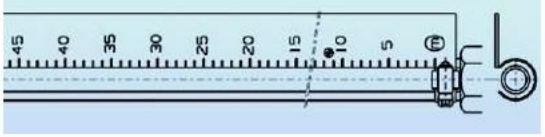

Others, except the above specification are available on request by customer.

DRAWINGS

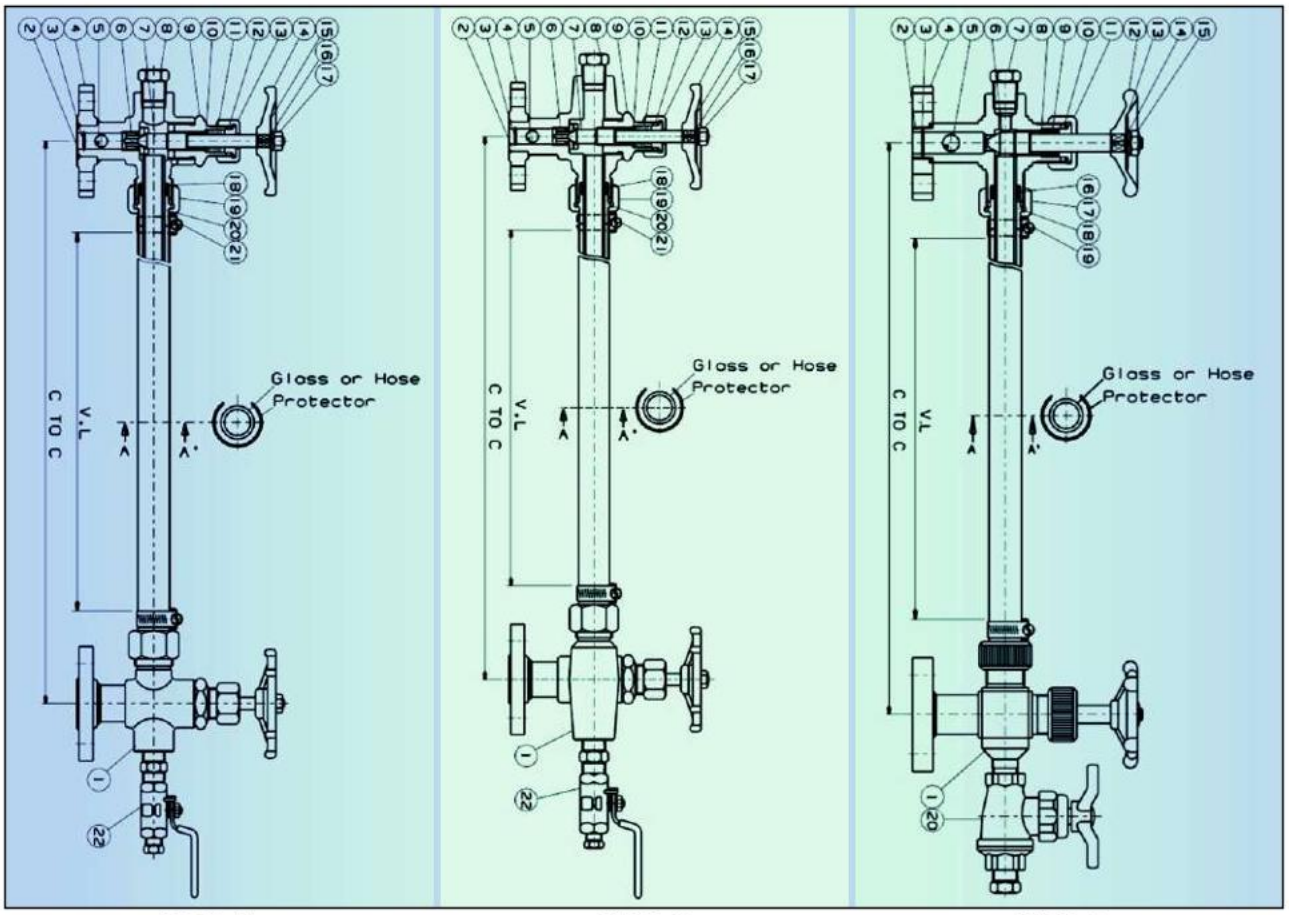

SBG-1 SBG-2 SBG-3

SBG-1 & 2

NO.	PARTS	NO.	PARTS
1	Lower Valve Body	12	Gland
2	Upper Valve Body	13	Gland Nut
3	Retainer	14	Hand Wheel
4	Flange	15	Name Plate
5	Check Ball	16	Washer
6	Seat	17	Nut
7	Stem	18	Packing
8	Plug	19	Connection Nut
9	Bonnet	20	Connection
10	Packing Ring	21	Hose Band
11	Gland Packing	22	Drain Valve

SBG-3

NO.	PARTS	NO.	PARTS
1	Lower Valve Body	11	Gland Nut
2	Upper Valve Body	12	Hand Wheel
3	Retainer	13	Name Plate
4	Flange	14	Washer
5	Check Ball	15	Nut
6	Stem	16	Packing
7	Plug	17	Connection Nut
8	Packing Ring	18	Connection
9	Gland Packing	19	Hose Band
10	Gland	20	Drain Valve

CHAPTER- 3

LIQUID LEVEL GAUGE

REFLEX GAUGE SERIES

IN THIS CHAPTER-3

Here is explain the reflex type liquid level gauge series for **SAM IL**'s standard and there may be a little changed or revised for quality improvement and special requirements of our valuable customers. Included the model that is **SRG-1SM** in this chapter as a Flat Self-Closing Type for Marine.

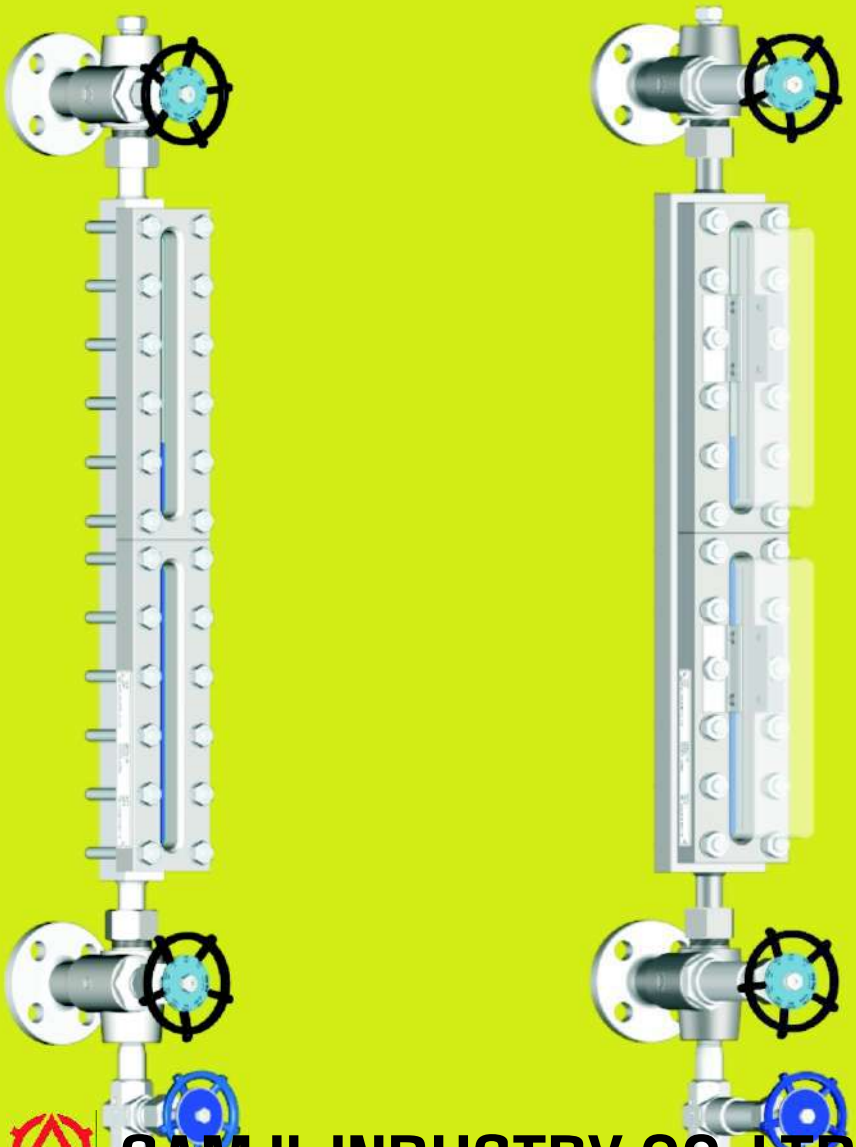

PRESSURE - TEMPERATURE CHARTS FOR REFLEX GLASS

INTRODUCTION :

As the Reflex Glass is not used with mica shield, there is rather limited to use the glass according to fluid and its process conditions. When it is take account of the R-Type level gauge for any process conditions, there must make sure that an application conditions are satisfied reciprocally safety working conditions between the glass and the chamber. for maximum working condition of the chamber[=shell], refer to each pages for gauge chamber pressure-temperature charts. this type also have a number of highly advantageous including light weight, availability of longer visible lengths and lower price than the transparent series.

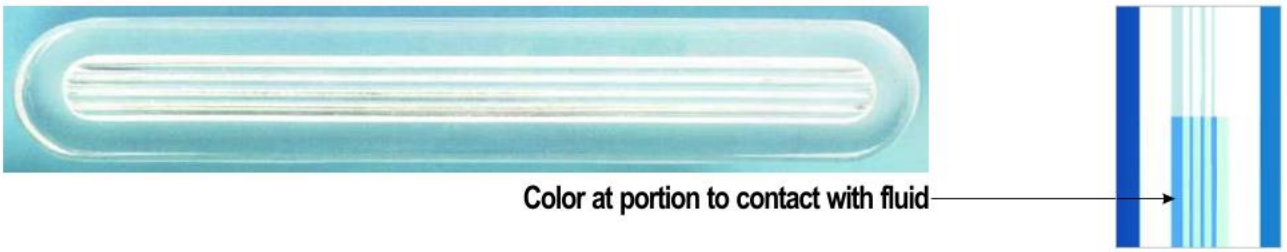

REFLEX GLASS

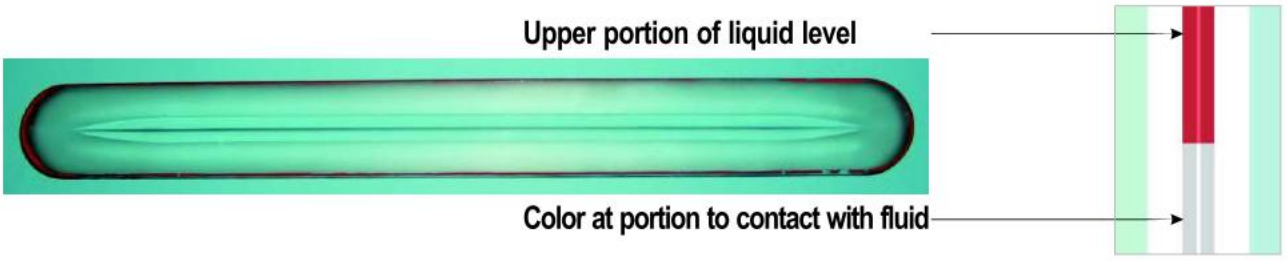

BI-COLOR REFLEX GLASS

Reflex Glass Application Conditions

Saturated steam or hot water in direct contact with reflex sight glass is :

- **Maximum Permissible Pressure : 500 psi[35bar] at 243 °C [470 °F]**

■ The chart shown on the right is range of application with no technically significant glass attack.

■ Reflex Glasses can be used with all media except steam at service conditions up to 5800 psi[400bar] or temperature up to 750 °F [400 °C].

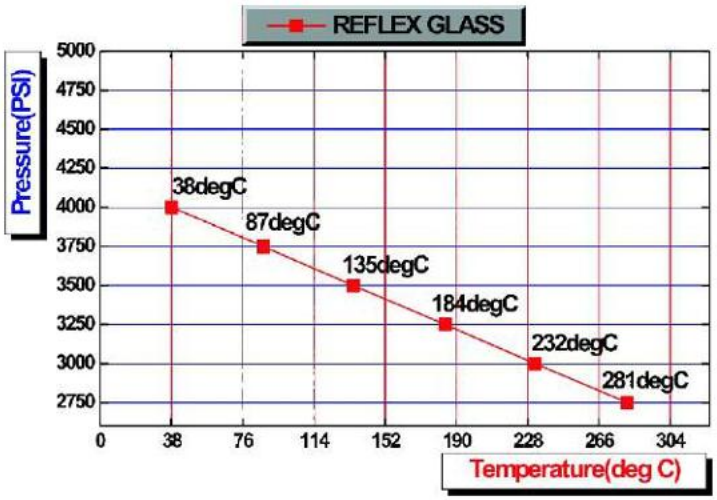

GENERAL DESCRIPTION

Reflex Liquid Level Gauge use the R - form sight glasses. One side surface of Reflex Glass to use flat glass has several grooves for reflecting prism. The principle of the Reflex Glass is based on the difference in the refractive indices of liquid and gas or in particular of water and steam. Liquid level shows conspicuously dark hard color for Liquid space and light white for empty space. These Reflex series are not used with the Mica shield. Thus, **SAM IL** does not recommend these series for Caustic, Hydrofluoric, Distilled Water or other liquid corrosive to glass.
The Reflex Gauge is assembled firmly with gasket, reflex glass, cushion gasket and gauge cover on the body by U-Bolts for SRG-1 & 2 and Stud Bolts for SRG-3 & 4, in order.

SRG-1 & 2

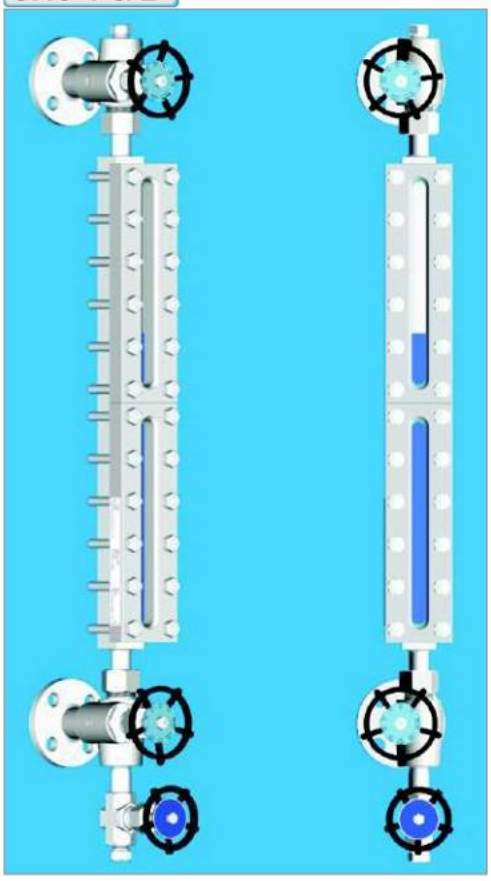

OPTIONS

- **Scale Plate**
  - units : Cm, Liter
- **Vent**
  - Needle Valve
  - Gate Valve
  - Globe Valve
  - Nipple & Cap
- **Drain**
  - Needle Valve
  - Gate Valve
  - Globe Valve
  - Nipple & Cap
- **Bracket**
  - Longer than 3000 mm of C to C
- **Gauge Valve**
  - Hand Wheel with Chain
  - Arm Lever

SRG-3 & 4

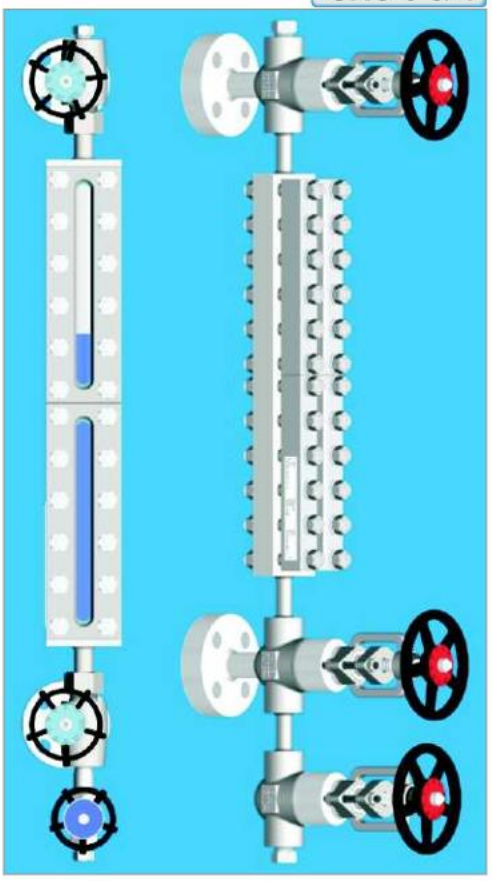

SPECIFICATIONS

- **MATERIAL** : C.S, LTCS, Stainless Steel, A182-F11, 22, 5, 9, 91 & Monel, Titanium, Hastelloy, Alloy-20, etc.
- **VISIBLE LENGTH** : 90 to 3510 mm.
- **MAX. NO. OF SECTION** : 10 Sections.
- **VESSEL CONNECTION** : 3/4" or 1" Flanged ANSI 150# ~ 2500#.
- **GAUGE BODY & GAUGE VALVE CON'N** : Not Rotatable & 360° Rotatable [turn to page G-9].
- **SHELL TEST PRESSURE** : 1.5 Times at the Max. Working Pressure.

Others, except the above specification are available on request by customer.

Reflex Gauge Glasses are designed for the direct observation of Liquid level in the tanks or drums.

SECTION FOR MODEL : SRG-1 & 2

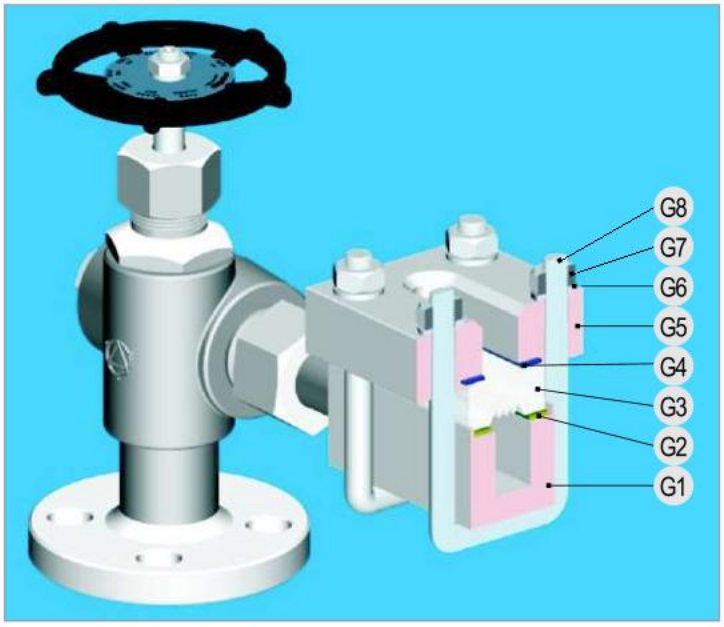

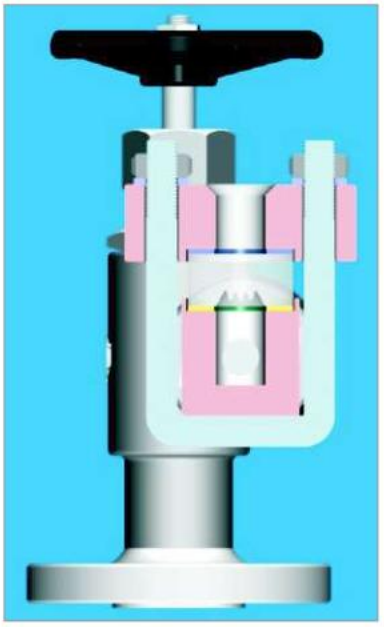

NO.	PARTS	MATERIAL	NO.	PART	MATERIAL
G1	Gauge Body	C.S, Stainless Steel	G5	Gauge Cover	C.S
G2	Sealing Gasket	Graphite, Non-Asbestos	G6	Washer	SWRH-62B
G3	Reflex Glass	Borosilicate	G7	Nuts	A194 Gr.2H
G4	Cushion Gasket	Non-Asbestos	G8	U - Bolts	A193 Gr.B7

- SAM IL has been carried out actual shell test and simulation using software for FEA and we found the safety ranges for Pressure - Temperature rating by the models.

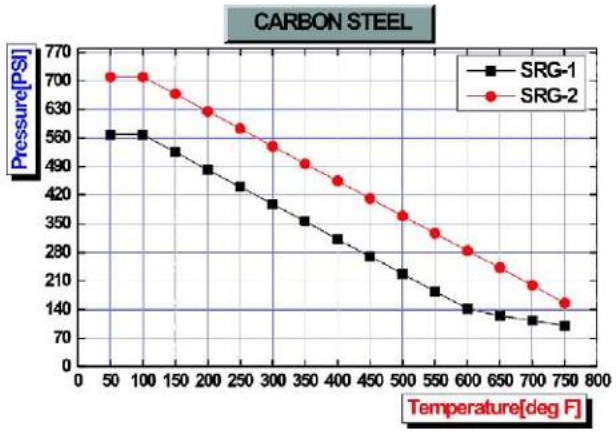

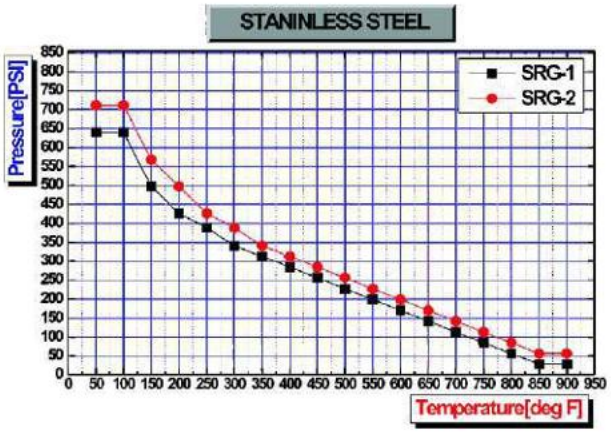

GAUGE CHAMBER PRESSURE - TEMPERATURE CHARTS FOR SAFETY OPERATING

Others, except the above materials of part are available on request by customer.

SECTION FOR MODEL : SRG-3 & 4

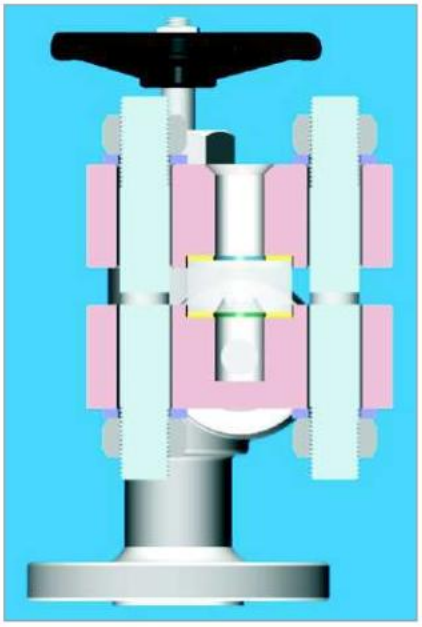

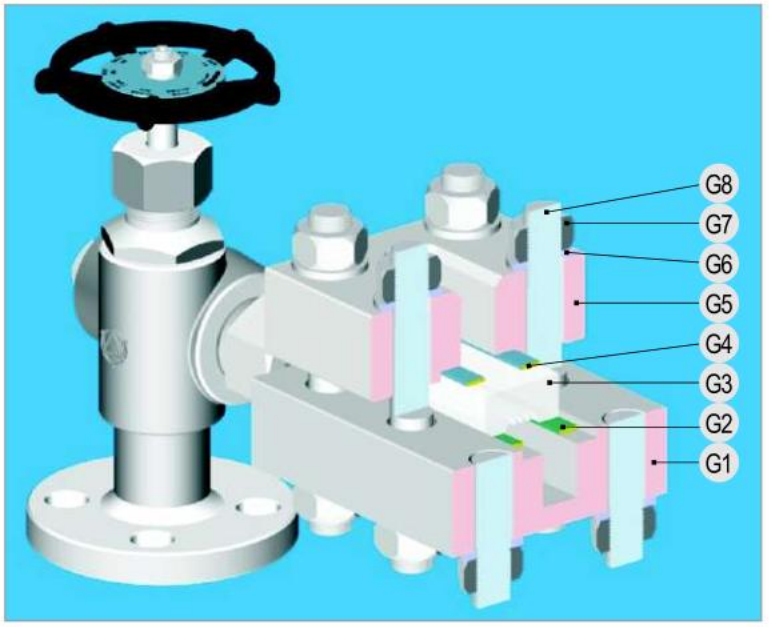

NO.	PARTS	MATERIAL	NO.	PART	MATERIAL
G1	Gauge Body	C.S, Stainless Steel	G5	Gauge Cover	C.S
G2	Sealing Gasket	Graphite, Non-Asbestos	G6	Washer	SWRH-62B
G3	Reflex Glass	Borosilicate	G7	Nuts	A194 Gr.2H
G4	Cushion Gasket	Non-Asbestos	G8	Stud - Bolts	A193 Gr.B7



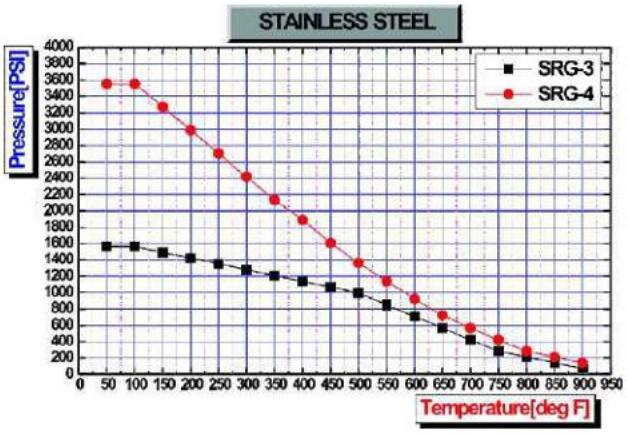

GAUGE CHAMBER PRESSURE - TEMPERATURE CHARTS FOR SAFETY OPERATING

Others, except the above materials of part are available on request by customer.

GENERAL DESCRIPTION

The most advantage of this type is for easy level reading of boiling liquids. in the event of liquids boiling, its bubbling makes indistinct the surface level. in this type of gauge with the larger volume of the liquid chamber will be reduced bubbling. Thereby this type should facilitate to read its level of bubbling liquids. it has also provides highly advantages for highly dense and viscous liquid. the body is made of seamless pipe.
SAM IL's Large Chamber Reflex Types are classified into four[4] models, those are SRLG-1,2,3 & 4 according to process conditions which are max. working pressure & temperature [see page **G-4**].
This type is comprised of assembling order to fasten the nuts, set the sealing gasket, reflex glass, cushion gasket, gauge cover, bolts and nuts on the large chamber, in regular sequence.

SRLG-1 & 2

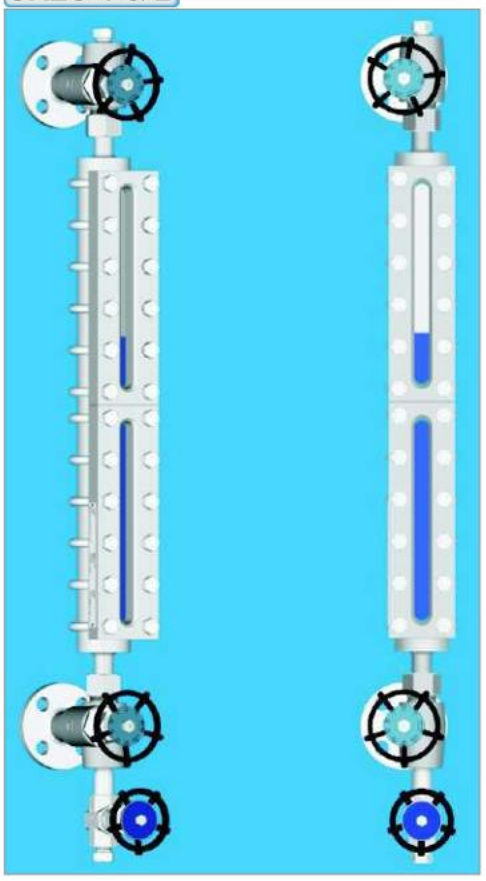

OPTIONS

- **Scale Plate**
  - units : Cm, Liter
- **Vent**
  - Needle Valve
  - Gate Valve
  - Globe Valve
  - Nipple & Cap
- **Drain**
  - Needle Valve
  - Gate Valve
  - Globe Valve
  - Nipple & Cap
- **Bracket**
  - Longer than 3000 mm of C to C
- **Gauge Valve**
  - Hand Wheel with Chain
  - Arm Lever

SRLG-3 & 4

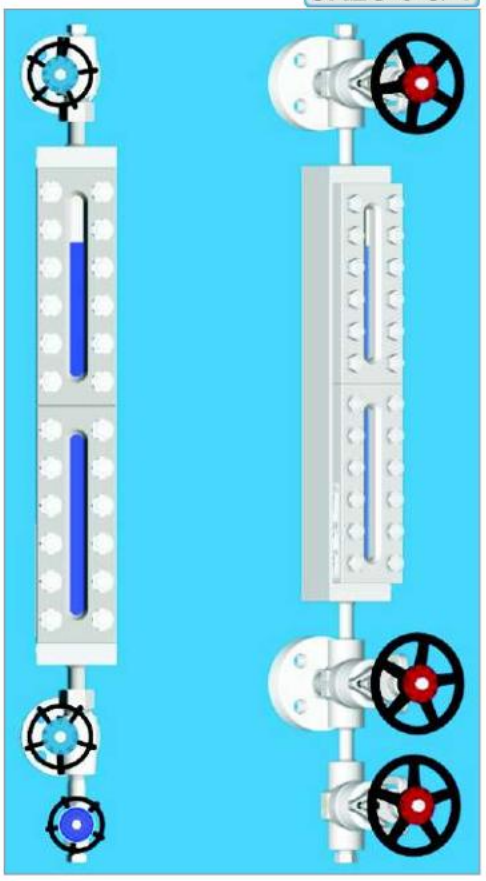

SPECIFICATIONS

- **MATERIAL** : C.S, LTCS, Stainless Steel, A182-F11, 22, 5, 9, 91 & Monel, Titanium, Hastelloy, Alloy-20, etc.
- **VISIBLE LENGTH** : 90 to 3510 mm.
- **MAX. NO. OF SECTION** : 10 Sections.
- **VESSEL CONNECTION** : 3/4" or 1" Flanged ANSI 150# ~ 2500# [900# ~ 2500# : Special Type].
- **GAUGE BODY & GAUGE VALVE CON'N** : Not Rotatable & 360° Rotatable [turn to page **G-9**].
- **SHELL TEST PRESSURE** : 1.5 Times at the Max. Working Pressure.

Others, except the above specification are available on request by customer.

This SRLG is designed and manufactured for easy and accurate reading the liquid level of highly foamy liquids. the gauge has a relatively spacious internal area where foamy liquid is held from forming foams. thereby providing rather more accurate level observations.

SECTION FOR MODEL : SRLG-1,2 & 3,4



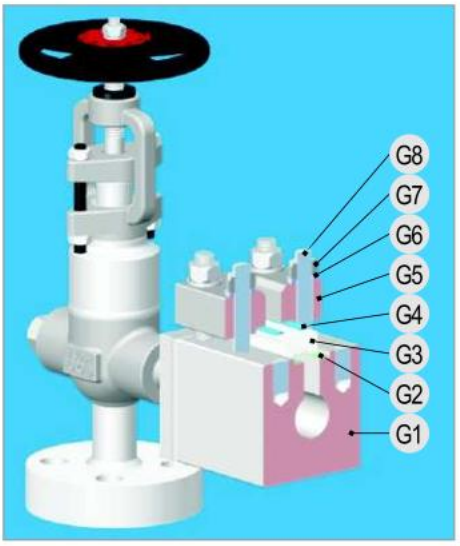

NO.	PARTS	MATERIAL	NO.	PART	MATERIAL
G1	Gauge Body	C.S, Stainless Steel	G5	Gauge Cover	C.S
G2	Sealing Gasket	Graphite, Non-Asbestos	G6	Washer	SWRH-62B
G3	Reflex Glass	Borosilicate	G7	Nuts	A194 Gr.2H
G4	Cushion Gasket	Non-Asbestos	G8	Bolts	A193 Gr.B7

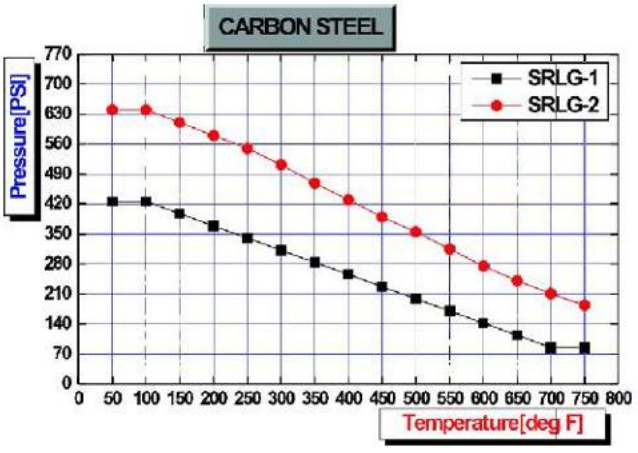

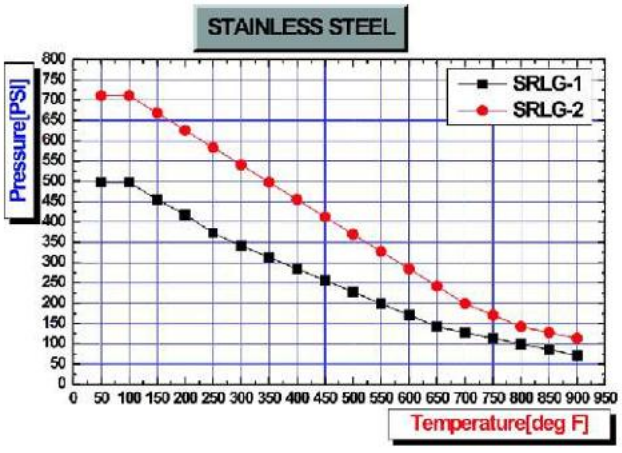

GAUGE CHAMBER PRESSURE - TEMPERATURE CHARTS FOR SAFETY OPERATING

Others, except the above materials of part are available on request by customer.

GENERAL DESCRIPTION

If a conventional level gauge is used for extremely low-temperature applications, it becomes difficult to observe the level of liquid as the gauge front tends to freeze. to get rid of this problem, the acrylic non-frosting plate window is mounted in the front of the gauge like as below and you will observe the level easily far better.
SAM IL's Non-Frosting Reflex Types are classified into two[2] types, Models are SRNG-1,2,3 & 4 and SRLNG-1,2,3 & 4 according to process conditions [see page **G-4**]. depending on the working temperature conditions, the height of the Non-Frosting plate window may be selected from 75 to 250 mm.
This type is comprised of assembling order to fasten the nuts, set the sealing gasket, reflex glass, cushion gasket, gauge cover, bolts and nuts on the Reflex Body, in order and then the Non-Frosting plate is mounted on it.

SRNG-1,2,3 & 4

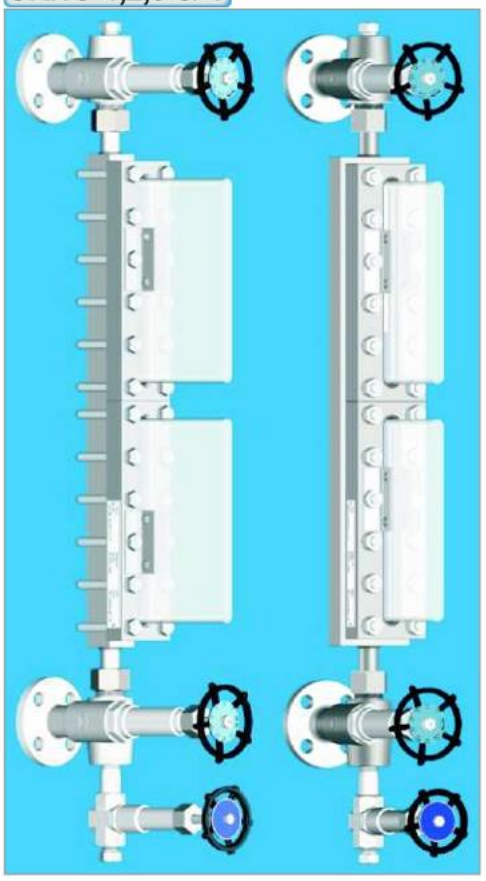

OPTIONS

- **Scale Plate**
  - units : Cm, Liter
- **Vent**
  - Needle Valve
  - Gate Valve
  - Globe Valve
  - Nipple & Cap
- **Drain**
  - Needle Valve
  - Gate Valve
  - Globe Valve
  - Nipple & Cap
- **Bracket**
  - Longer than 3000 mm of C to C
- **Gauge Valve**
  - Hand Wheel with Chain
  - Arm Lever

SRLNG-1,2,3 & 4

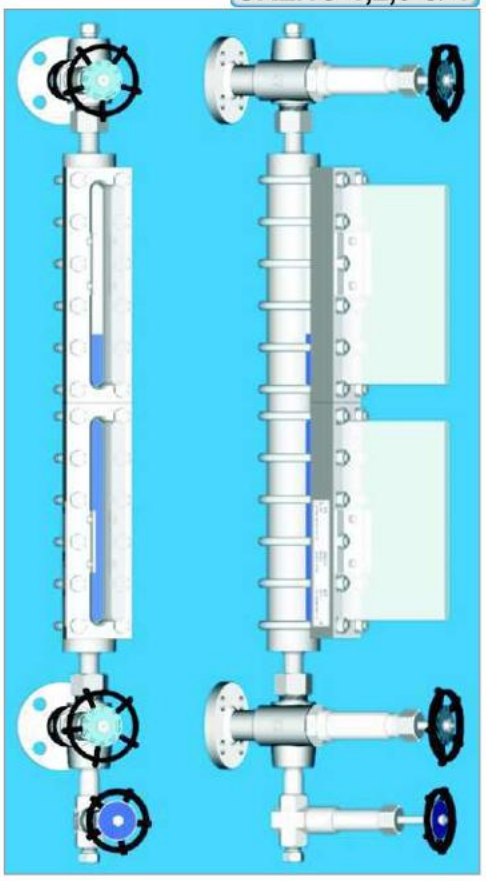

SPECIFICATIONS

- **MATERIAL** : LTCS & Stainless Steel.
- **VISIBLE LENGTH** : 90 to 3510 mm.
- **MAX. NO. OF SECTION** : 10 Sections.
- **VESSEL CONNECTION** : 3/4" or 1" Flanged ANSI 150# ~ 2500# .
- **GAUGE BODY & GAUGE VALVE CON'N** : Not Rotatable & 360° Rotatable [turn to page **G-9**].
- **SHELL TEST PRESSURE** : 1.5 Times at the Max. Working Pressure.

Others, except the above specification are available on request by customer.

These SRNG and SRLNG is used for protecting the frost at low-temperature. thereby you can easily read level position through these SRNG & SRLNG Models.

SECTION FOR MODEL : SRNG-1,2 & 3,4

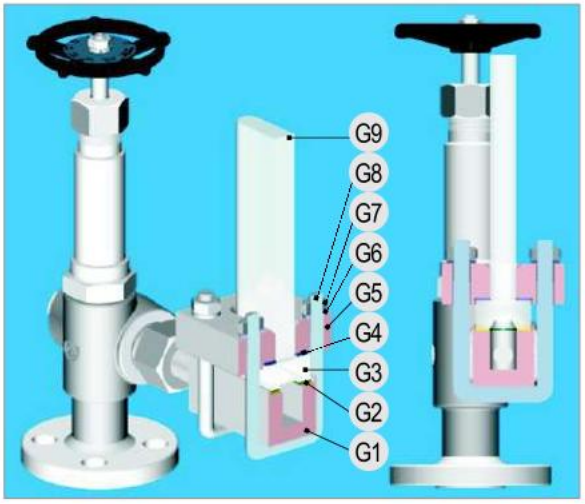

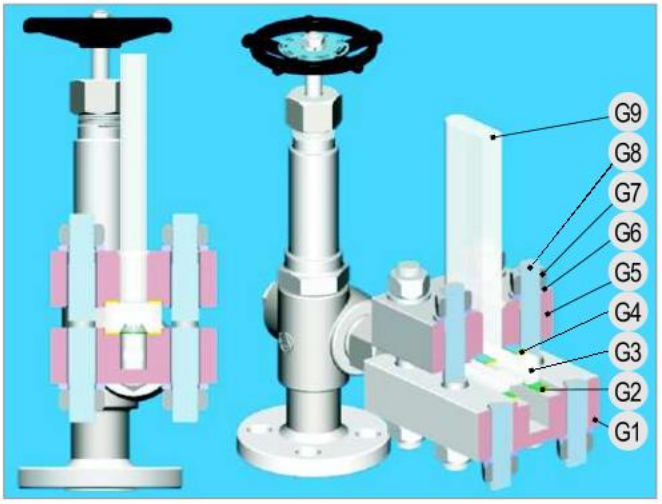

NO.	PARTS	MATERIAL	NO.	PART	MATERIAL
G1	Gauge Body	LTCS, Stainless Steel	G5	Gauge Cover	LTCS, Stainless Steel
G2	Sealing Gasket	Non-Asbestos	G6	Washer	SWRH-62B
G3	Reflex Glass	Borosilicate	G7	Nuts	A194 Gr.2H, A194 Gr.4
G4	Cushion Gasket	Non-Asbestos	G8	Bolts	A193 Gr.B7, A320 Gr.L7
			G9	Non - Frosting	Acrylic

SECTION FOR MODEL : SRLNG-1,2 & 3,4



Since these types are used at a temperature below freezing point, gauge valve and drain valve is used with long bonnet type for preventing chilblains on your hands.



TEMPERATURE RATING & DIMENSIONS OF NON-FROSTING PLATES

Temperature [°C]	0 ~ -20	-21 ~ -45	-46 ~ -100	-101 ~ -160	-161 ~ -200
Materials	LTCS	LTCS	304SS	316SS	316LSS
Acrylic Height [H]	75	100	150	200	250

Others, except the above materials of part are available on request by customer.

GENERAL DESCRIPTION

This type is usually called a Jacket Type. This gauge is used to read the level of highly congealable or ebullient liquids. The principle is to inflow a steam for congealable liquids and a cold water for ebullient liquids through the inside of the jacket to ensure accurate and reliable level observation.

SAM IL's Jacket Reflex Types are classified into two[2] types, Models are SRJG-1,2,3 & 4 and SRLJG-1,2,3 & 4 according to process conditions which are max. working pressure & temperature [see page **G-4**].

This type is comprised of assembling order to fasten the nuts, set the sealing gasket, reflex glass, cushion gasket, gauge cover, bolts and nuts in regular sequence, on the Reflex Body equipped with Jacket for heating and cooling. Semi - Jacket may also be installed on the gauge body only, without gauge valve.

SRJG-1 & 2



OPTIONS

- **Scale Plate**
  - units : Cm, Liter
- **Vent**
  - Needle Valve
  - Gate Valve
  - Globe Valve
  - Nipple & Cap
- **Drain**
  - Needle Valve
  - Gate Valve
  - Globe Valve
  - Nipple & Cap
- **Bracket**
  - Longer than 3000 mm of C to C
- **Gauge Valve**
  - Hand Wheel with Chain
  - Arm Lever

SRJG-3 & 4

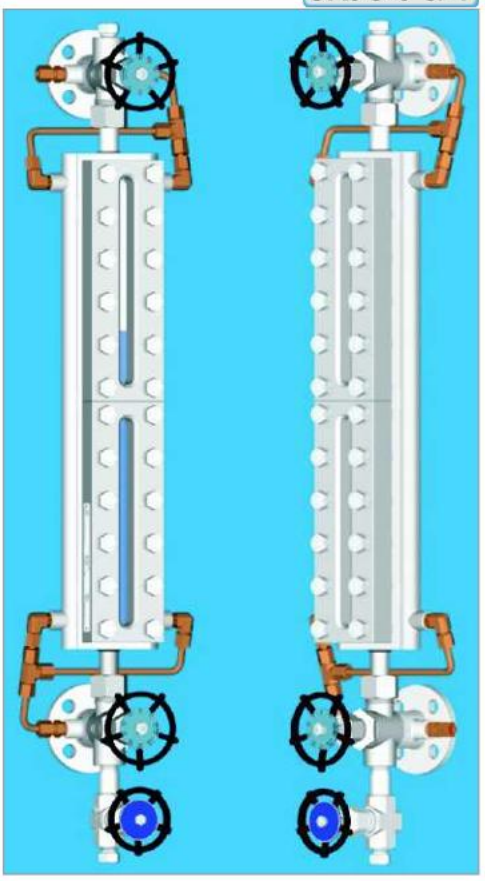

SPECIFICATIONS

- **MATERIAL** : C.S, LTCS, Stainless Steel, A182-F11,22,5,9,91 & Monel, Titanium, Hastelloy, Alloy-20, etc.
- **VISIBLE LENGTH** : 90 to 3510 mm.
- **MAX. NO. OF SECTION** : 10 Sections.
- **VESSEL CONNECTION** : 3/4" or 1" Flanged ANSI 150# to 2500#.
- **GAUGE BODY & GAUGE VALVE CON'N** : Not Rotatable & 360° Rotatable [turn to page **G-9**].
- **SHELL TEST PRESSURE** : 1.5 Times at the Max. Working Pressure.

Others, except the above specification are available on request by customer.

This type is used for observing the fluid by changing it into state of liquid after heating or cooling it through jacket according to features of fluid.
of **SAM IL** standard, the entrance of Jacket for inflowing a steam or cold water is 1/2" NPT[M]. other entrance sizes for the Jacket connection are available on request by customers.
Steam or Cooling Media is circulated through the Jacket.

SECTION FOR MODEL : SRJG-1 & 2



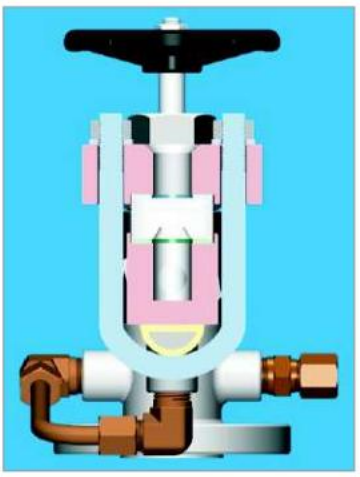

NO.	PARTS	MATERIAL	NO.	PART	MATERIAL
G1	Gauge Body	C.S, Stainless Steel	G5	Gauge Cover	C.S
G2	Sealing Gasket	Graphite, Non-Asbestos	G6	Washer	SWRH-62B
G3	Reflex Glass	Borosilicate	G7	Nuts	A194 Gr.2H
G4	Cushion Gasket	Non-Asbestos	G8	Bolts	A193 Gr.B7
			G9	Jacket Pipe	C.S or Stainless Steel

SECTION FOR MODEL : SRJG-3 & 4

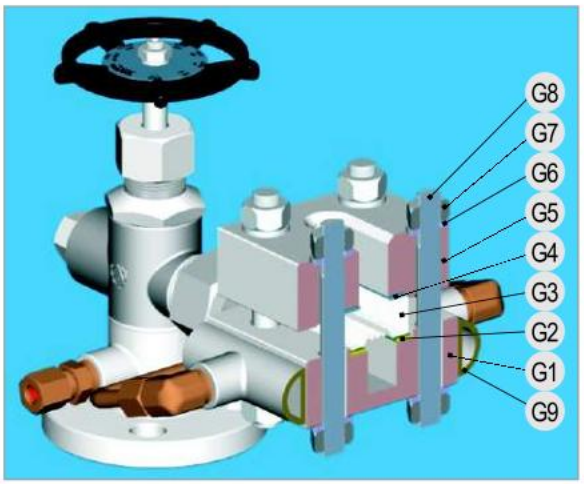

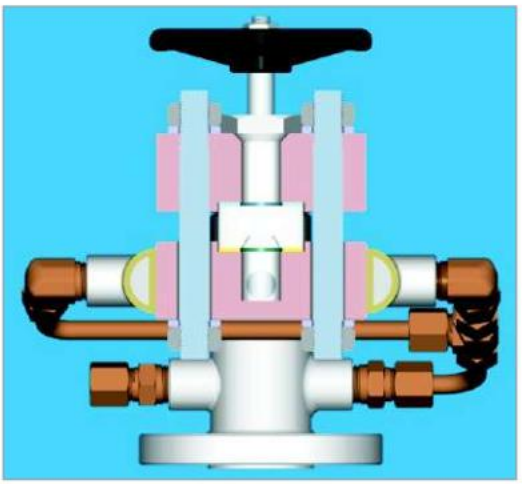

Others, except the above materials of part are available on request by customer.

GENERAL DESCRIPTION

The most advantage of this type have no invisible sections [Dead Band]. **SAM IL**'s standard overlapped section is ten [10] mm as minimum and the gauge is so designed that supporting brackets as illustrated on next page can be equipped to protect a long multiple connected gauge from distortion of fall down. The scale plate to mount along side the gauge may be available on request by customers to observe the liquid level more accurately.
This type is comprised of assembling order to fasten the nuts, set the sealing gasket, reflex glass, cushion gasket, gauge cover, bolts and nuts on the Reflex Body after making Zig-Zag formed the body.

SRZG-1 & 2

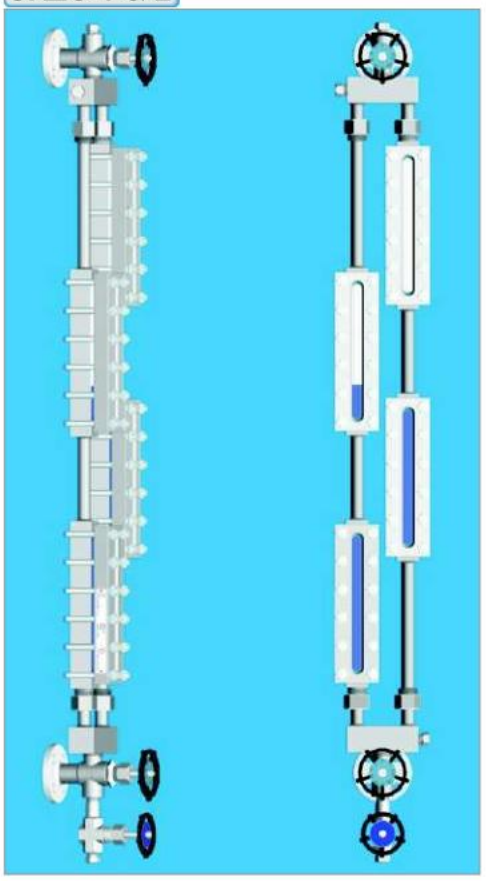

OPTIONS

- **Scale Plate**
  - units : Cm, Liter
- **Vent**
  - Needle Valve
  - Gate Valve
  - Globe Valve
  - Nipple & Cap
- **Drain**
  - Needle Valve
  - Gate Valve
  - Globe Valve
  - Nipple & Cap
- **Bracket**
  - Longer than 3000 mm of C to C
- **Gauge Valve**
  - Hand Wheel with Chain
  - Arm Lever

SRZG-3 & 4

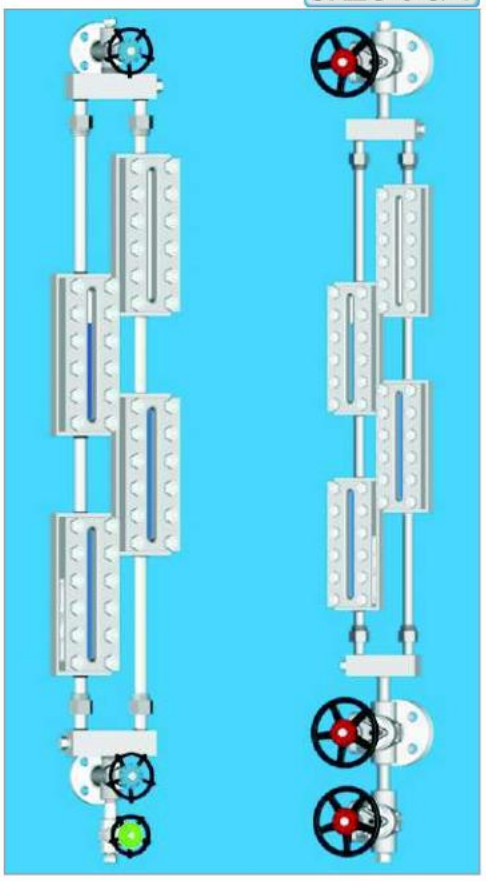

SPECIFICATIONS

- **MATERIAL** : C.S, LTCS, Stainless Steel, A182-F11, 22, 5, 9, 91 & Monel, Titanium, Hastelloy, Alloy-20, etc.
- **VISIBLE LENGTH** : Max. 6050 mm.
- **MAX. NO. OF SECTION** : 20 Sections.
- **VESSEL CONNECTION** : 3/4" or 1" Flanged ANSI 150# to 2500#.
- **GAUGE BODY & GAUGE VALVE CON'N** : Not Rotatable & 360° Rotatable [turn to page **G-9**].
- **SHELL TEST PRESSURE** : 1.5 Times at the Max. Working Pressure.

Others, except the above specification are available on request by customer.

SECTION FOR MODEL : SRZG-1 & 2

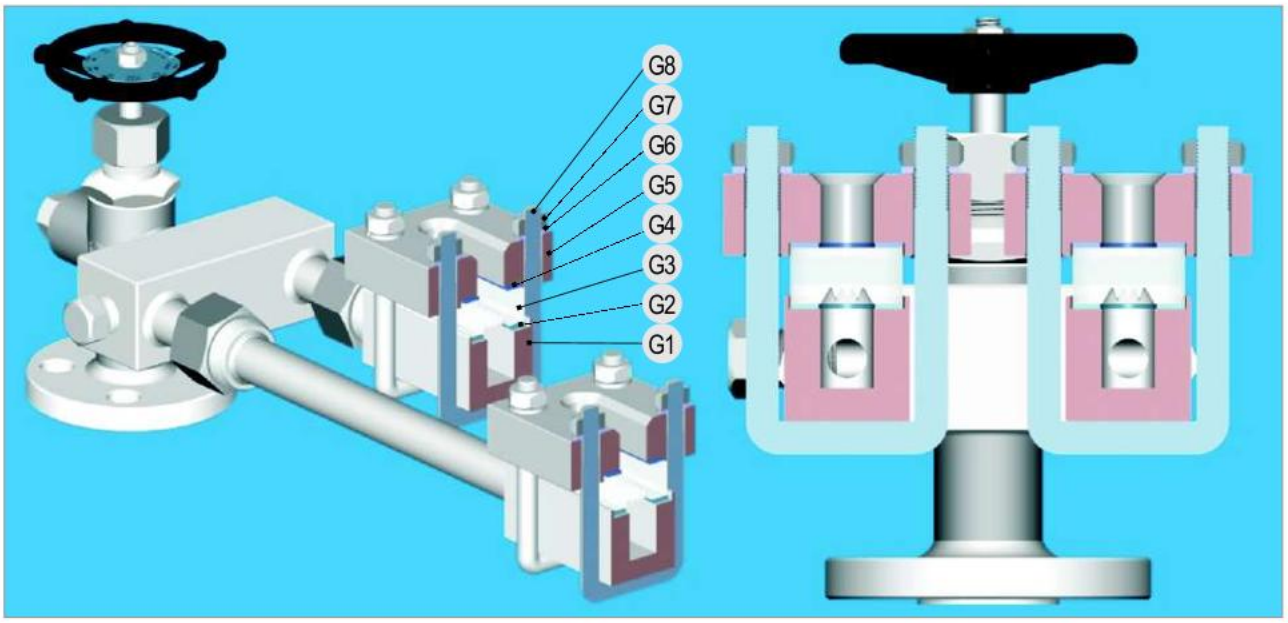

NO.	PARTS	MATERIAL	NO.	PART	MATERIAL
G1	Gauge Body	C.S, Stainless Steel	G5	Gauge Cover	C.S
G2	Sealing Gasket	Graphite, Non-Asbestos	G6	Washer	SWRH-62B
G3	Reflex Glass	Borosilicate	G7	Nuts	A194 Gr.2H
G4	Cushion Gasket	Non-Asbestos	G8	U - Bolts	A193 Gr.B7

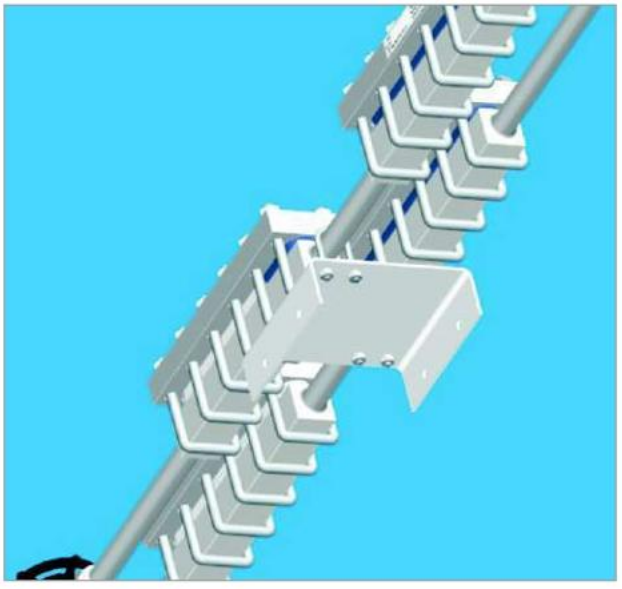

1. Details of the Bracket dimension will be indicated on the drawing for submittal and may be changed on request by customers.

2. As shown on the left-hand side illustrated, this is **SAM IL**'s standard and you can connect the supporting from our supporting bracket to Vessel.

3. Bracket for supporting is built on this model for **7** gauges(=**7**sections) and over as standard.

4. Assembly - Dismantling on the body is easy.

Others, except the above materials of part are available on request by customer.

SECTION FOR MODEL : SRZG-3 & 4

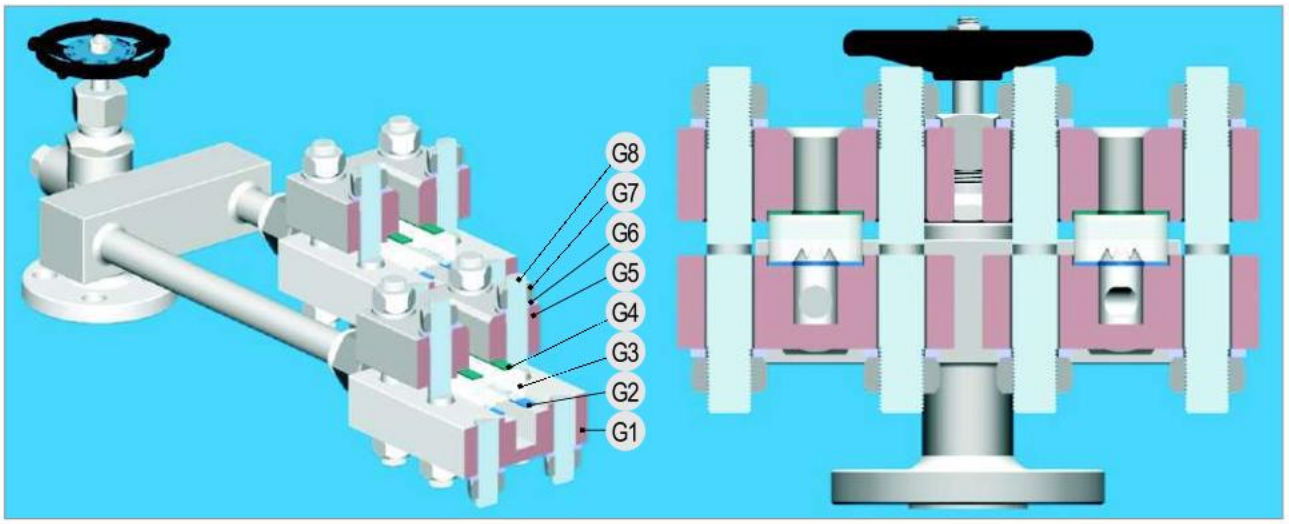

NO.	PARTS	MATERIAL	NO.	PART	MATERIAL
G1	Gauge Body	C.S, Stainless Steel	G5	Gauge Cover	C.S
G2	Sealing Gasket	Graphite, Non-Asbestos	G6	Washer	SWRH-62B
G3	Reflex Glass	Borosilicate	G7	Nuts	A194 Gr.2H
G4	Cushion Gasket	Non-Asbestos	G8	Stud - Bolts	A193 Gr.B7

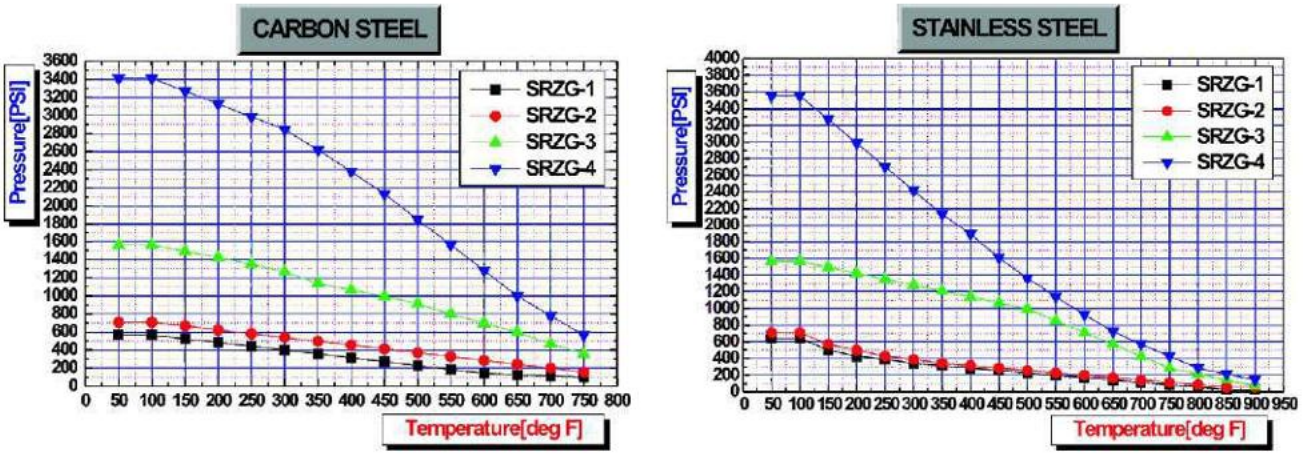

GAUGE CHAMBER PRESSURE - TEMPERATURE CHARTS FOR SAFETY OPERATING

Others, except the above materials of part are available on request by customer.

SOLID DRAWING & DIMENSIONS

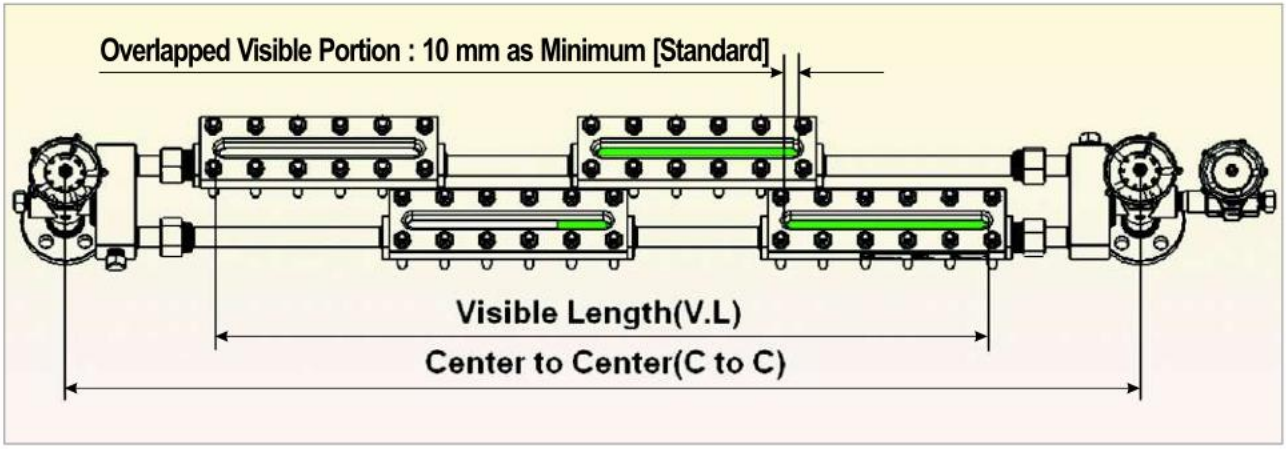

No. of Gauge Sections	Glass No. - 7		Glass No. - 8		Glass No. - 9	
	C TO C [mm]	V•L [mm]	C TO C [mm]	V•L [mm]	C TO C [mm]	V•L [mm]
2 Gauges	800	500	880	580	920	620
3 Gauges	1040	740	1160	860	1220	920
4 Gauges	1290	990	1450	1150	1520	1220
5 Gauges	1530	1230	1720	1420	1820	1520
6 Gauges	1770	1470	2000	1700	2120	1820
7 Gauges	2000	1700	2300	2000	2420	2120
8 Gauges	2250	1950	2550	2250	2720	2420
9 Gauges	2500	2200	2850	2550	3020	2720
10 Gauges	2750	2450	3100	2800	3300	3000
11 Gauges	3000	2700	3400	3100	3600	3300
12 Gauges	3200	2900	3700	3400	3900	3600
13 Gauges	3450	3150	3950	3650	4200	3900
14 Gauges	3700	3400	4250	3950	4500	4200
15 Gauges	3950	3650	4550	4250	4800	4500
16 Gauges	4200	3900	4800	4500	5100	4800
17 Gauges	4400	4100	5100	4800	5400	5100
18 Gauges	4650	4350	5400	5100	5700	5400
19 Gauges	4900	4600	5650	5350	6000	5700
20Gauges	5100	4800	5900	5600	6300	6000

Visible + 300 mm = C to C [For Gauge Valve Model : SS, SO, SB at Page **G-9**].

Others, except the above dimensions are available on request by customer.

GENERAL DESCRIPTION

More severe demands may be often required on liquid level gauges in terms of resistance to corrosion, and this is accomplished by lining or coating all parts to contact with the liquid. The most important aspect of this process is the preparation of the metal substrate. For this, **SAM IL** employs only the latest machinery and highly an expert personnel.

SAM IL's Lined Reflex Types are classified into two[2] models, Models are SRG-1LD and SRLG-1LD according to the properties of fluids [see page **G-4**].

This type is comprised of assembling order to fasten the nuts, set the sealing gasket, reflex glass, cushion gasket, gauge cover, bolts and nuts in regular sequence, on the Reflex Body to Lined.

SRG-1LD

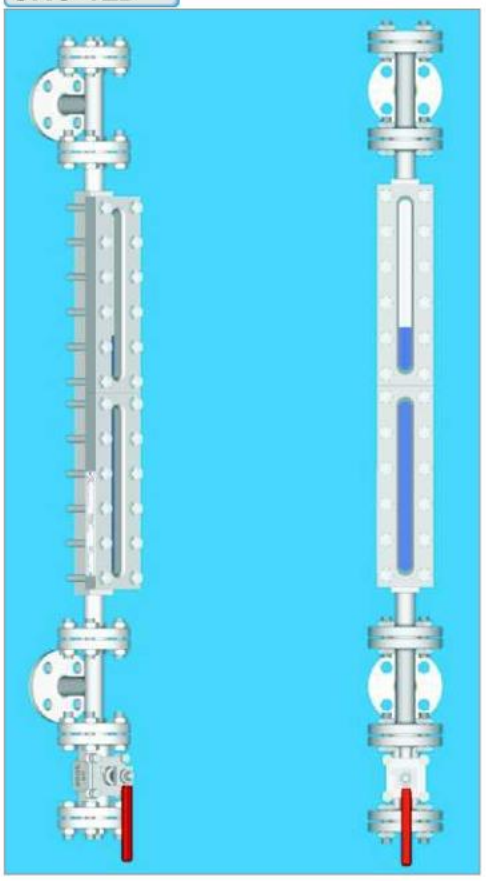

OPTIONS

- **Scale Plate**
  - units : Cm, Liter
- **Bracket**
  - Longer than 3000 mm of C to C

SRLG-1LD



SPECIFICATIONS

- **MATERIAL** : Carbon Steel & Stainless Steel
- **VISIBLE LENGTH** : 90 to 3510 mm.
- **MAX. NO. OF SECTION** : 10 Sections.
- **VESSEL CONNECTION** : 3/4" to 2" Flanged ANSI 150# ~ 300#.
- **SHELL TEST PRESSURE** : 1.5 Times at the Max. Working Pressure.

Others, except the above specification are available on request by customer.

Block Valve, Drain and Vent Valve of Lined Reflex Type are available on Plug Valve, etc., any request.

SECTION FOR MODEL : SRG-LD

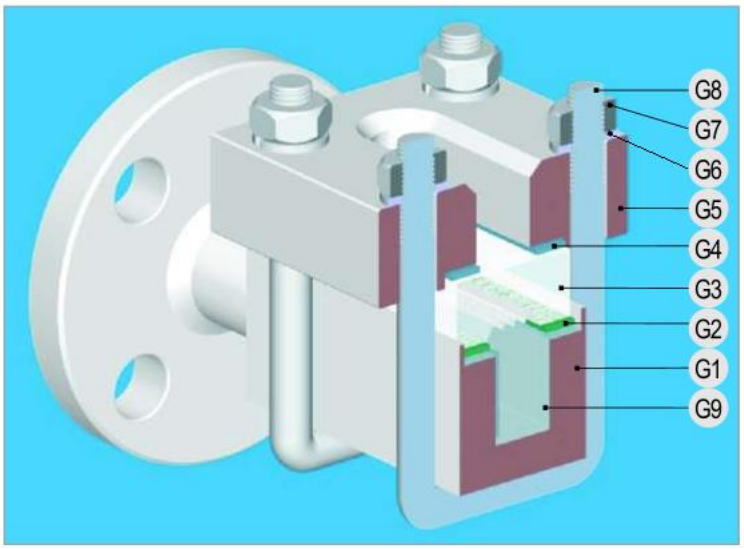

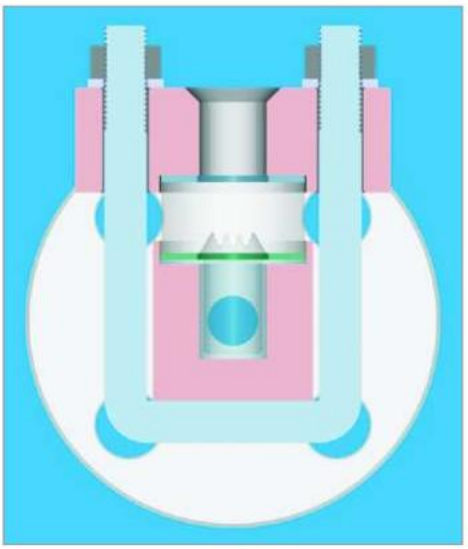

NO.	PARTS	MATERIAL	NO.	PART	MATERIAL
G1	Gauge Body	C.S, Stainless Steel	G5	Gauge Cover	C.S
G2	Sealing Gasket	Rubber, Soft Teflon	G6	Washer	SWRH-62B
G3	Reflex Glass	Borosilicate	G7	Nuts	A194 Gr.2H
G4	Cushion Gasket	Non-Asbestos	G8	Bolts	A193 Gr.B7
			G9	Lining	Hard Rubber, Teflon

SECTION FOR MODEL : SRLG-LD

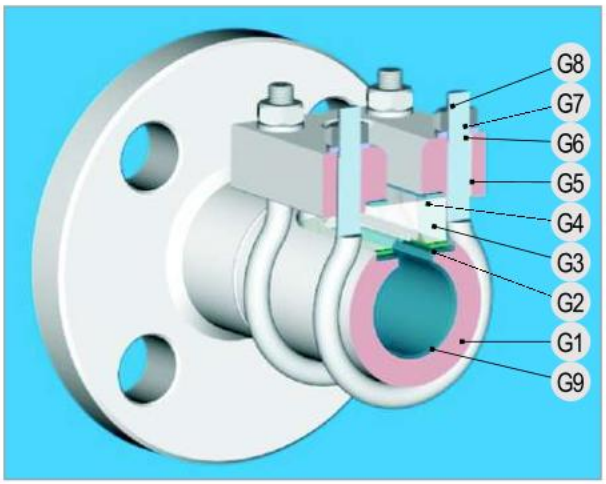

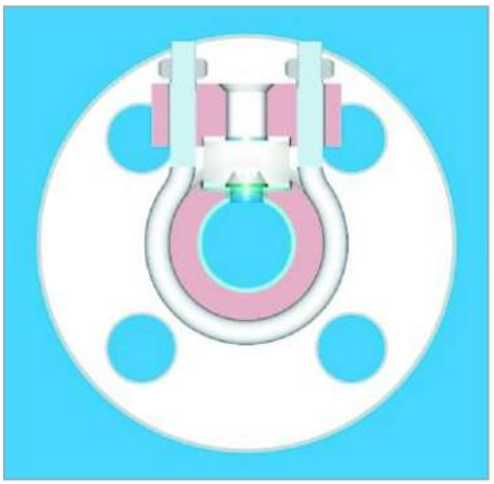

Others, except the above materials of part are available on request by customer.

GENERAL DESCRIPTION

This gauge is used with a special reflex type gauge glass which has wider V - Shaped single refractive groove and red coating on the outside all of the glass. It provides a clear observation of liquid level because of made refracting red color on the V - Groove for steam or beyond portion of the level and its color of fluid itself for liquid portions.
SAM IL's Bi-Color Reflex Types are classified into two[2] models, those are SRG-1 & 2BC according to process conditions which are max. working pressure & temperature [see page **G-4**].
This type is comprised of assembling order to fasten the nuts, set the sealing gasket, bi-color reflex glass, cushion gasket, gauge cover, bolts and nuts on the Reflex Body.

SRG-1BC

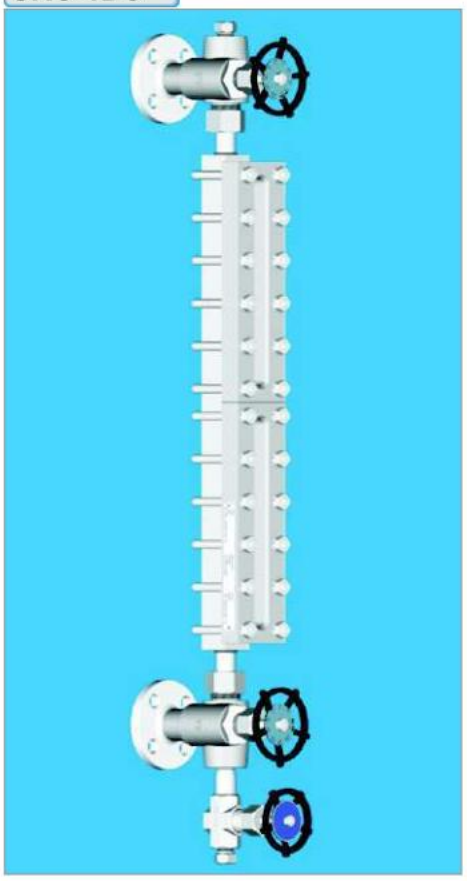

OPTIONS

- **Scale Plate**
  - units : Cm, Liter
- **Vent**
  - Needle Valve
  - Gate Valve
  - Globe Valve
  - Nipple & Cap
- **Drain**
  - Needle Valve
  - Gate Valve
  - Globe Valve
  - Nipple & Cap
- **Bracket**
  - Longer than 3000 mm of C to C
- **Gauge Valve**
  - Hand Wheel with Chain
  - Arm Lever

SRG-2BC

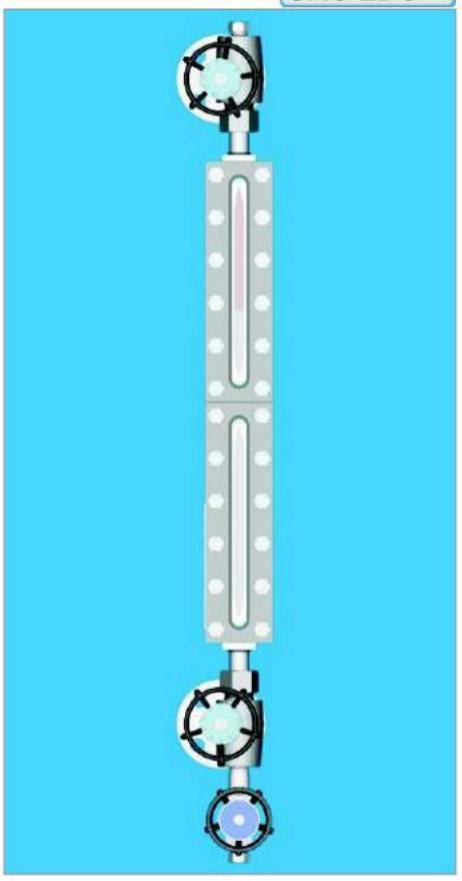

SPECIFICATIONS

- **MATERIAL** : C.S, LTCS, Stainless Steel, A182-F11, 22, 5, 9, 91 & Monel, Titanium, Hastelloy, Alloy-20, etc.
- **VISIBLE LENGTH** : 90 to 3510 mm.
- **MAX. NO. OF SECTION** : 10 Sections.
- **VESSEL CONNECTION** : 3/4" or 1" Flanged ANSI 150# ~ 600# .
- **GAUGE BODY & GAUGE VALVE CON'N** : Not Rotatable & 360° Rotatable [turn to page **G-9**].
- **SHELL TEST PRESSURE** : 1.5 Times at the Max. Working Pressure.

Others, except the above specification are available on request by customer.

SECTION FOR MODEL : SRG-1 & 2BC

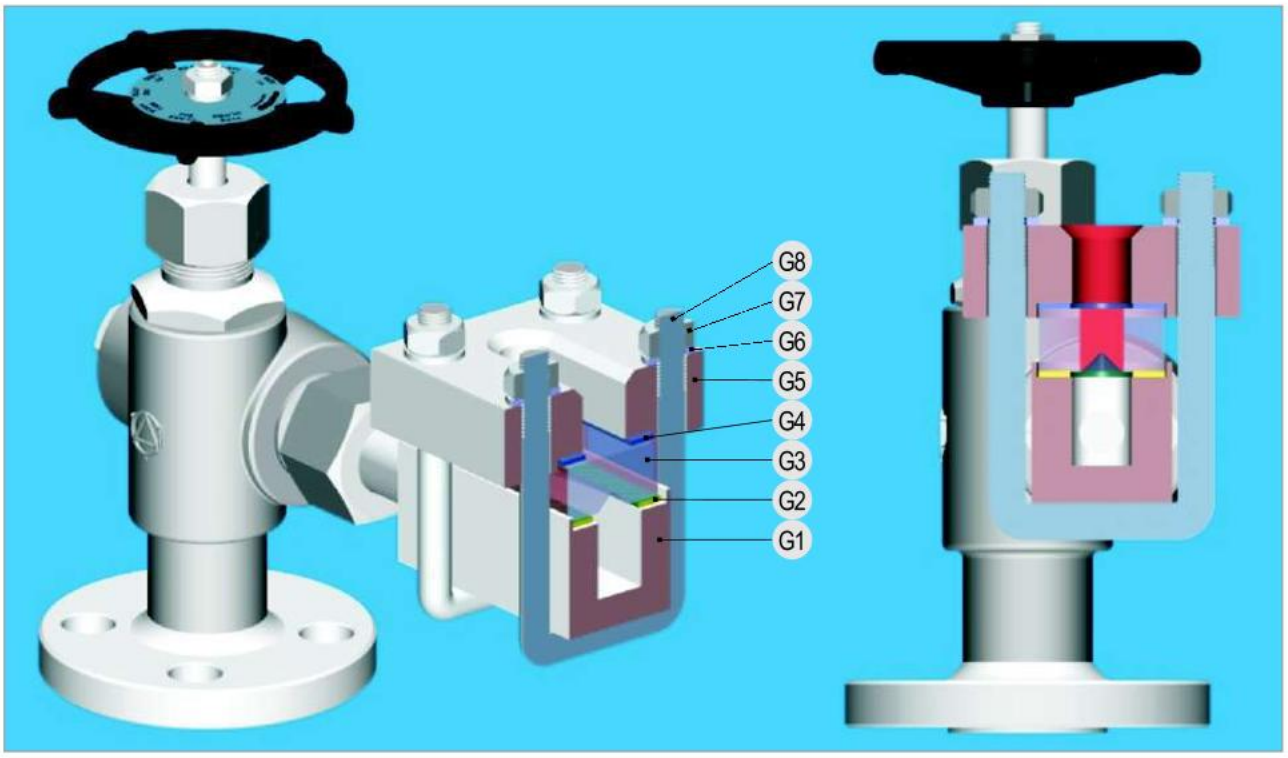

NO.	PARTS	MATERIAL	NO.	PART	MATERIAL
G1	Gauge Body	C.S, Stainless Steel	G5	Gauge Cover	C.S
G2	Sealing Gasket	Graphite, Non-Asbestos	G6	Washer	SWRH-62B
G3	Bi-Color Reflex Glass	Borosilicate	G7	Nuts	A194 Gr.2H
G4	Cushion Gasket	Non-Asbestos	G8	U - Bolts	A193 Gr.B7

Others, except the above materials of part are available on request by customer.

GENERAL DESCRIPTION

Features and Principles of this type is the same with basic Reflex Gauges except for the fact that the illuminator is mounted on the Reflex Gauge. Reflex Type with illuminator of **SAM IL** is useful for observing the fluid in a dim place or at night by using an explosion-proof and weather-proof.
The illuminator is possible to construct on all Reflex Models and SRG-IL Model is shown as below.

SRG-IL

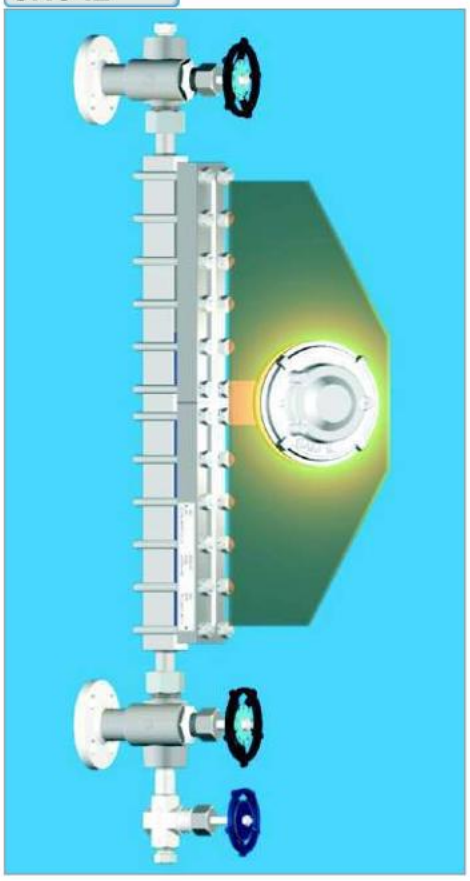

OPTIONS

- **Scale Plate**
  - units : Cm, Liter
- **Vent**
  - Needle Valve
  - Gate Valve
  - Globe Valve
  - Nipple & Cap
- **Drain**
  - Needle Valve
  - Gate Valve
  - Globe Valve
  - Nipple & Cap
- **Bracket**
  - Longer than 3000 mm of C to C
- **Gauge Valve**
  - Hand Wheel with Chain
  - Arm Lever

SRLG-IL

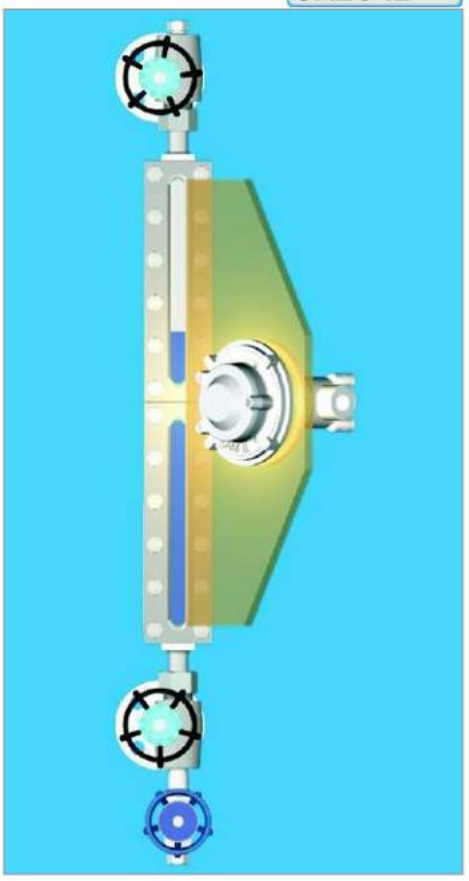

SPECIFICATIONS

- **MATERIAL** : C.S, LTCS, Stainless Steel, A182-F11, 22, 5, 9, 91 & Monel, Titanium, Hastelloy, Alloy-20, etc.
- **VISIBLE LENGTH** : 90 to 3510 mm.
- **MAX. NO. OF SECTION** : 10 Sections.
- **VESSEL CONNECTION** : 3/4" or 1" Flanged ANSI 150# ~ 2500# .
- **GAUGE BODY & GAUGE VALVE CON'N** : Not Rotatable & 360° Rotatable [turn to page **G-9**].
- **SHELL TEST PRESSURE** : 1.5 Times at the Max. Working Pressure.

Others, except the above specification are available on request by customer.

SECTION FOR MODEL : SRG-IL

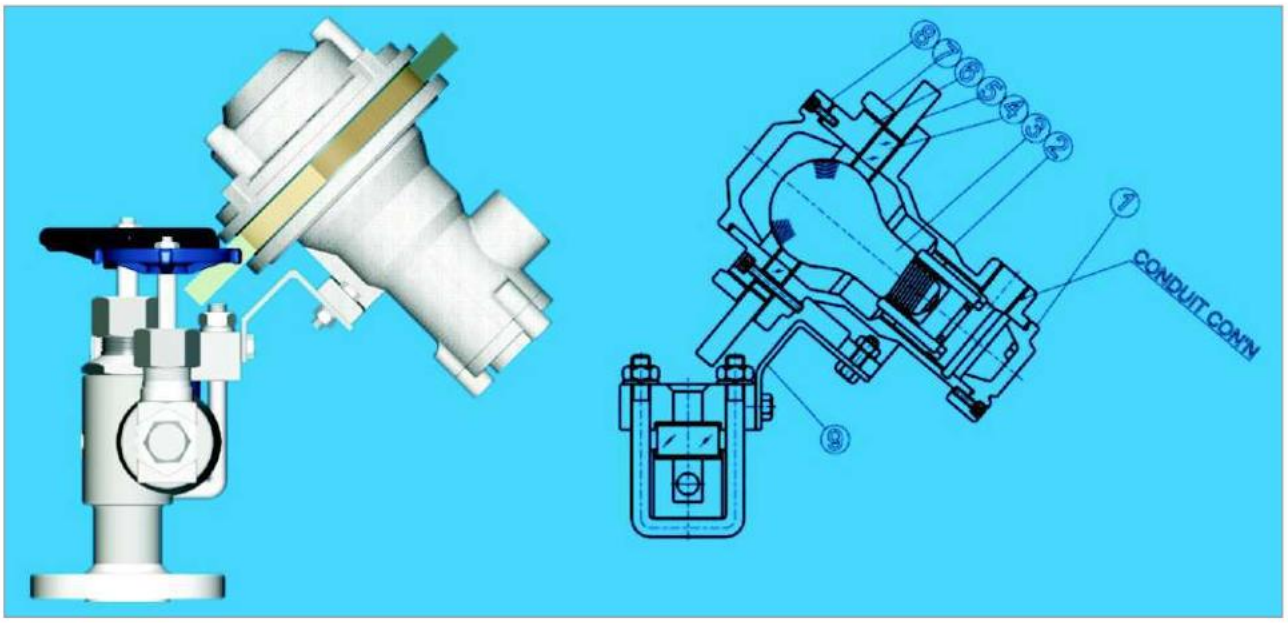

NO.	PARTS
1	Cover
2	Bulb Hosing
3	Bulb
4	Glass Plate
5	Reflector
6	Glass Cover
7	Front Cover
8	Bulb Cover
9	Bracket

CONDUIT CON'N DIMENSION		
Size [PT,NPT]	Outside Diameter [mm]	Thread per Inch
1/2"	21.34	14
3/4"	26.67	14
1"	33.40	11 1/2
Size	**Major Diameter [mm]**	**Pitch [mm]**
M16	15.97	1.5
M20	19.97	1.5
M25	24.97	1.5

ELECTRICITY

STANDARD :

- **Voltage** : AC 110~220V, 50Hz, 60Hz.
- **Bulb Light** : 30W~100W.
- **Explosion-Proof** : Ex d ⅡB + H_2 T5

- **Others** : The Certificate of Explosion-Proof : Division 1 and 2 ; Class Ⅰ : Group B, C, D ;
  Class Ⅱ : Group E, F, G ;
  Class Ⅲ : Type 4 at FM Approved.
  Division 1 and 2 ; Class Ⅰ : Group B, C, D ;
  Class Ⅱ : Group E, F, G ;
  Class Ⅲ : Type 4 at CSA Certified Ex d.

: The Certificate of CENELEC is available on EExd ⅡB + H_2 T4, IP66.
: The Certificate of U.L is available on Class Ⅰ : Groups C and D Temp. Code T4A ; Division 1.
Class Ⅰ : Group B Temp. Code T2A : Division 2.

Others, except the above SAM IL's standard electricity are available on request by customer.

GENERAL DESCRIPTION

Marine Gauge is used for observing the fluid of oil tank for ship and it's light weight rather than typical level gauge for land.



OPTIONS

■ **Scale Plate**
- units : Cm, Liter

Marine Gauge mainly use to the following places :

1. Fuel and Water tanks on diesel locomotives.
2. Marine Water tanks.
3. Vehicle fuelling installations.
4. Liquid Chemical, Industrial & Agricultural Storage tanks for low pressure.

SPECIFICATIONS

- ■ MATERIAL : Stainless Steel & Bronze.
- ■ VISIBLE LENGTH : 90 to 3510 mm.
- ■ MAX. NO. OF SECTION : 10 Sections.
- ■ VESSEL CONNECTION : 3/4" or 1" ANSI 150# Flanged.
- ■ GAUGE BODY & GAUGE VALVE CON'N : Not Rotatable & 360° Rotatable [turn to page G-9].
- ■ SHELL TEST PRESSURE : 1.5 Times at the Max. Working Pressure.

Others, except the above specification are available on request by customer.

CHAPTER– 4

LIQUID LEVEL GAUGE

TRANSPARENT GAUGE SERIES

IN THIS CHAPTER-4

Here is explain the transparent type liquid level gauge series for **SAM IL**'s standard and There may be a little changed for quality improvements and special requirements of our valuable customers. Included the **SWPG** series in this chapter as the direct welding pad gauges.

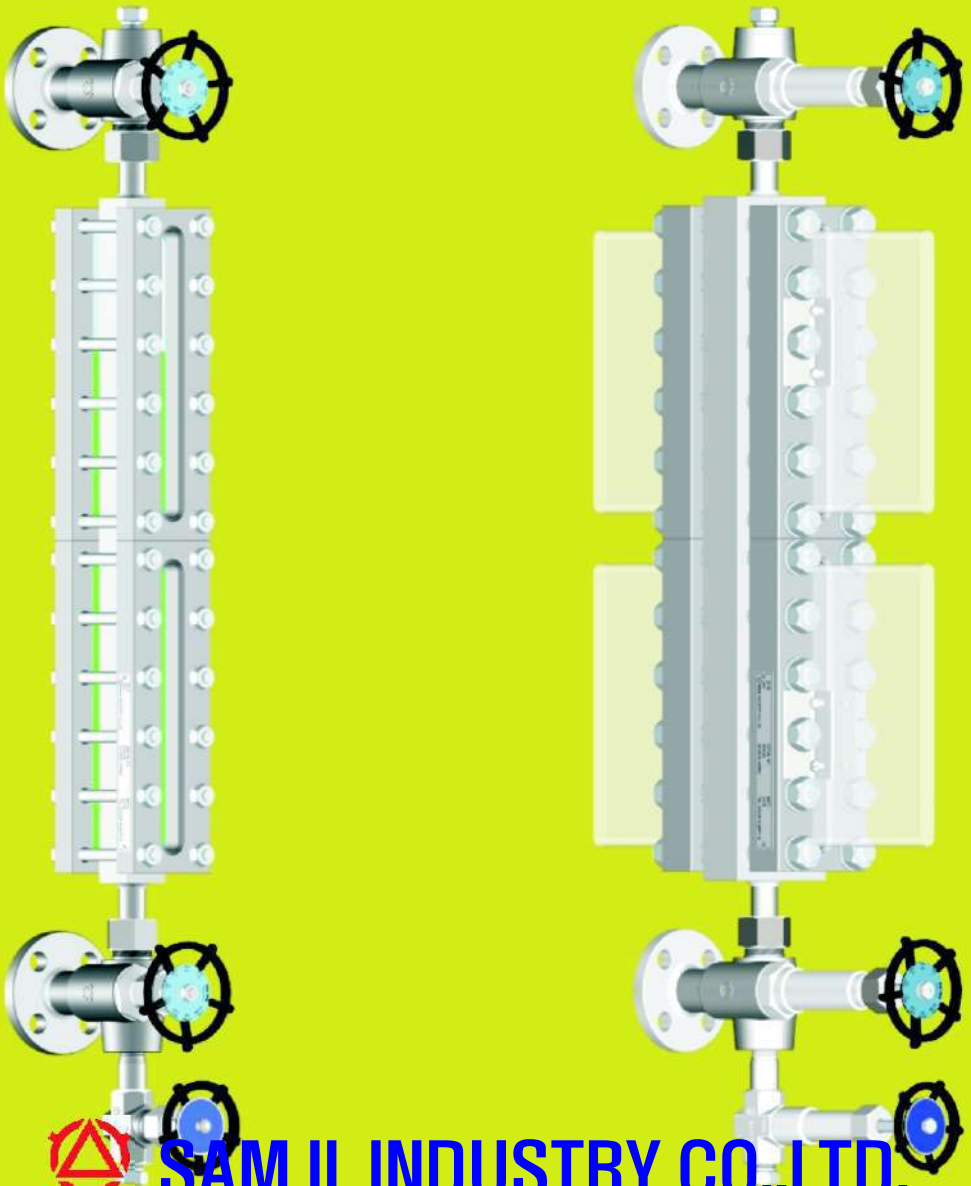

PRESSURE - TEMPERATURE CHARTS FOR TRANSPARENT GLASS

INTRODUCTION :

Gauge Glasses in liquid level gauges on steam boilers are exposed to very high mechanical and chemical stresses. The interface between steam and water is continuously in motion like as water evaporates, condensate forms. in this an event, the glass is wear rapidly.
For the above problem, Transparent Glasses could be protected with mica shield and if the medium is dirty, viscous on aggressive, flat transparent glasses guarantee better indication since the glass surface can be protected by mica shield against serious attack from media.

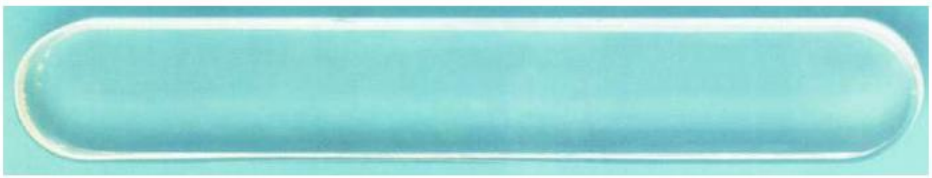

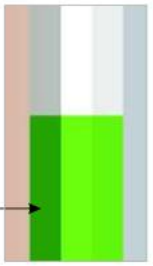

Liquid Color at portion to contact with fluid

TRANSPARENT GLASS

Transparent Glass Application Conditions

- Saturated steam or hot water in direct contact with transparent sight glass is :

- Maximum Permissible Pressure : 500 psi[35bar] at 243 °C [470 °F]

- Saturated steam or hot water in contact with transparent sight glass protected with Mica is :

- Maximum Permissible Pressure : 1500 psi[103bar] at 320°C [608°F]

- The chart shown on the right is range of application with no technically significant glass attack.
- Transparent Glasses can be used with all media except steam at service conditions up to 4930 psi or temperature up to 400°C.

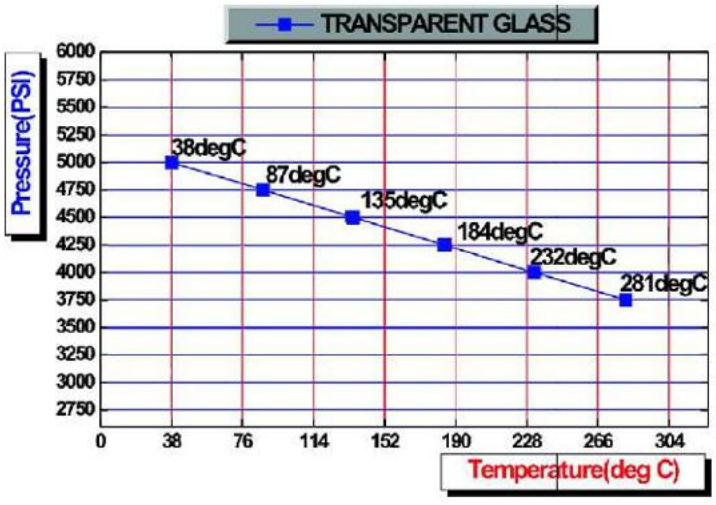

GENERAL DESCRIPTION

Transparent liquid level gauge use T-Form sight glasses. designed and built for a wide range of high temperature and high pressure applications, **SAM IL**'s transparent type level gauge is used to make observation of the level of corrosion-proof and chromatic liquids. These types are utilized two pieces of tempered flat gauge glasses, in front and rear of which are enclosed with a gauge cover using stud bolts. Where high temperature and corrosion are liable to occur, it can be furnished with a mica shield to prevent it from being corroded. These types are preferably used for reservoir tanks that require a relatively long visible length by constructing the supporter.
The Transparent Gauge is assembled firmly with gasket, [Mica Shield], transparent glass, cushion gasket and gauge cover on the body by Stud-Bolts for all STG series, in order.

STG-1 & 2

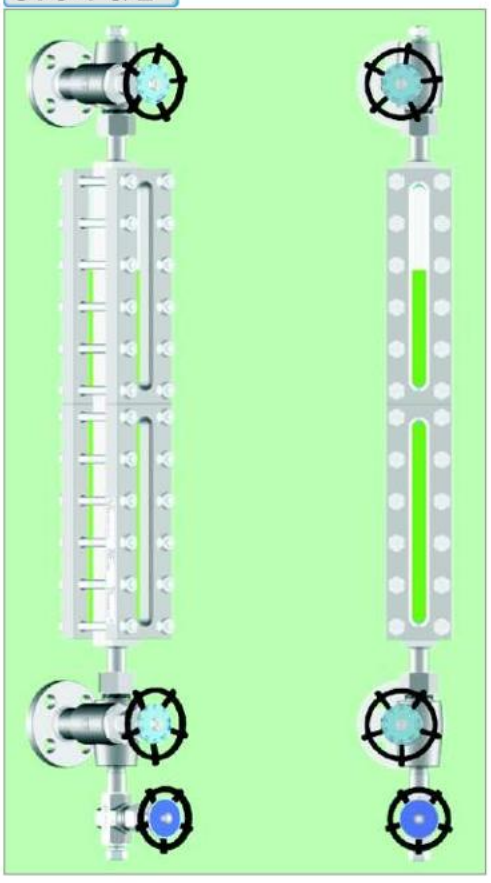

OPTIONS

- **Scale Plate**
  - units : Cm, Liter
- **Vent**
  - Needle Valve
  - Gate Valve
  - Globe Valve
  - Nipple & Cap
- **Drain**
  - Needle Valve
  - Gate Valve
  - Globe Valve
  - Nipple & Cap
- **Bracket**
  - Longer than 2000 mm of C to C
- **Gauge Valve**
  - Hand Wheel with Chain
  - Arm Lever

STG-3 & 4

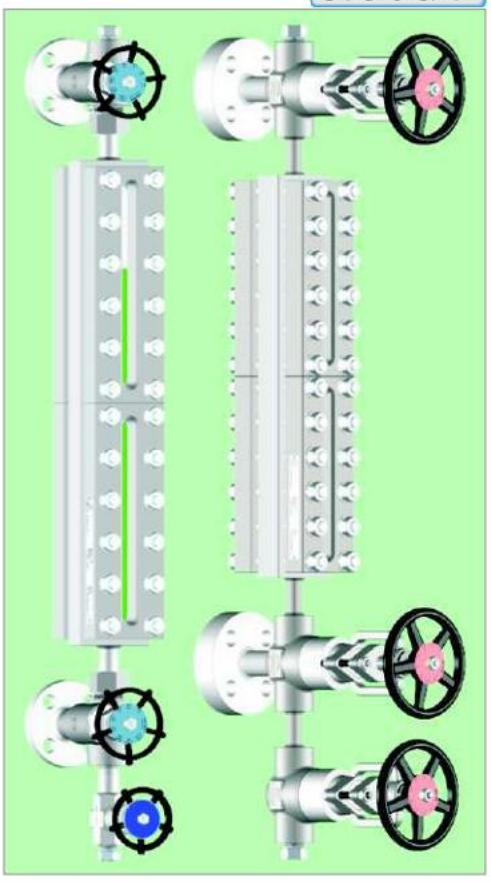

SPECIFICATIONS

- **MATERIAL** : C.S, LTCS, Stainless Steel, A182-F11, 22, 5, 9, 91 & Monel, Titanium, Hastelloy, Alloy-20, etc.
- **VISIBLE LENGTH** : 90 to 3510 mm.
- **MAX. NO. OF SECTION** : 10 Sections.
- **VESSEL CONNECTION** : 3/4" or 1" Flanged ANSI 150# ~ 2500#.
- **GAUGE BODY & GAUGE VALVE CON'N** : Not Rotatable & 360° Rotatable [turn to page **G-9**].
- **SHELL TEST PRESSURE** : 1.5 Times at the Max. Working Pressure.

Others, except the above specification are available on request by customer.

Transparent Gauge Glasses are designed for the direct observation of liquid levels in the tank and Mica Shiels inserted for caustic liquid and high temperature services.

SECTION FOR MODEL : STG-1 & 2

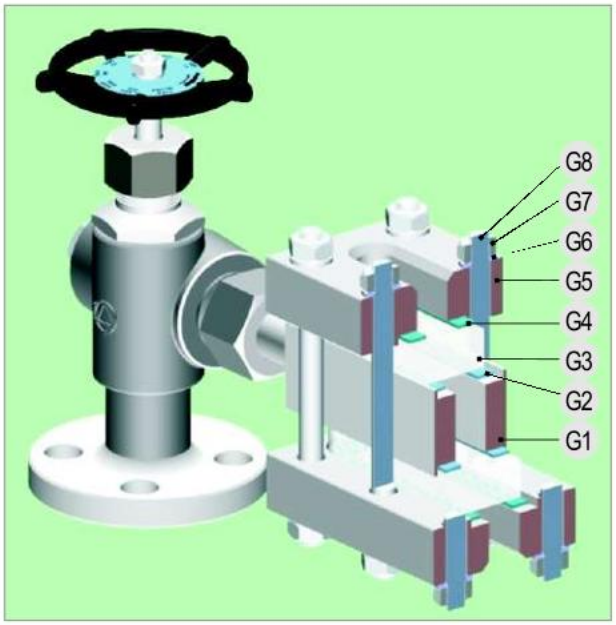

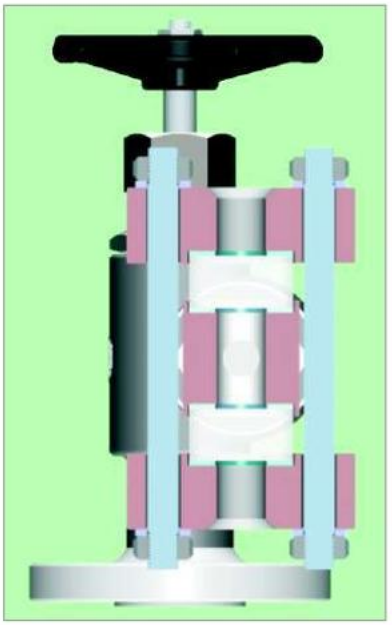

NO.	PARTS	MATERIAL	NO.	PART	MATERIAL
G1	Gauge Body	C.S, Stainless Steel	G5	Gauge Cover	C.S
G2	Sealing Gasket	Graphite, Non-Asbestos	G6	Washer	SWRH-62B
G3	Transparent Glass	Borosilicate	G7	Nuts	A194 Gr.2H
G4	Cushion Gasket	Non-Asbestos	G8	Stud - Bolts	A193 Gr.B7

- SAM IL has been carried out actual shell test and simulation using software for FEA and we found the safety ranges for Pressure - Temperature rating by the models.

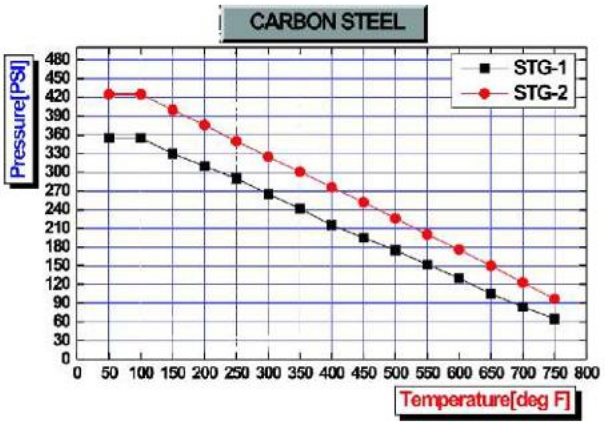

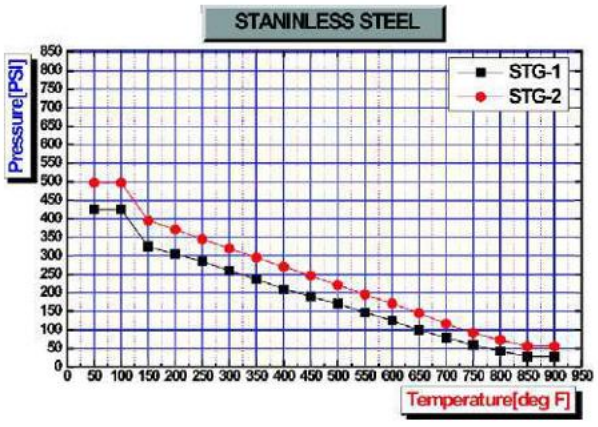

GAUGE CHAMBER PRESSURE - TEMPERATURE CHARTS FOR SAFETY OPERATING

Others, except the above materials of part are available on request by customer.

SECTION FOR MODEL : STG-3 & 4

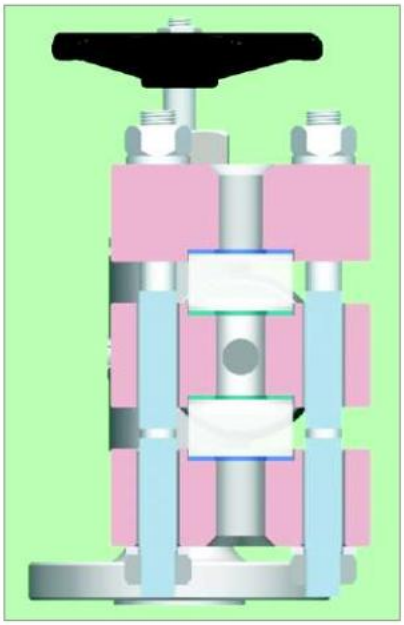

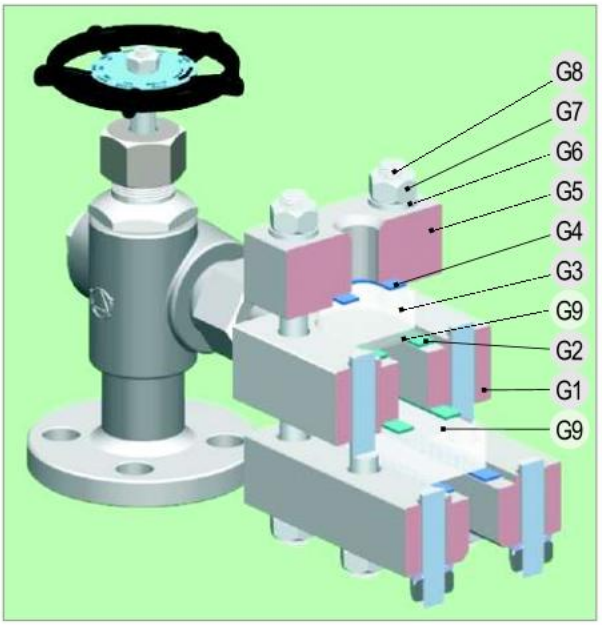

NO.	PARTS	MATERIAL	NO.	PART	MATERIAL
G1	Gauge Body	C.S, Stainless Steel	G5	Gauge Cover	C.S
G2	Sealing Gasket	Graphite, Non-Asbestos	G6	Washer	SWRH-62B
G3	Transparent Glass	Borosilicate	G7	Nuts	A194 Gr.2H
G4	Cushion Gasket	Non-Asbestos	G8	Stud-Bolts	A193 Gr.B7
			G9	Shield	Mica



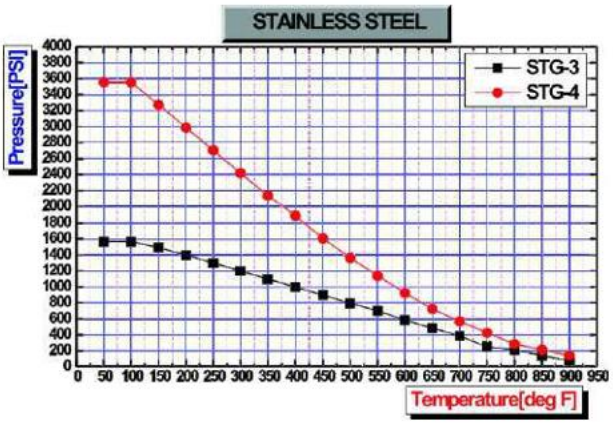

GAUGE CHAMBER PRESSURE - TEMPERATURE CHARTS FOR SAFETY OPERATING

Others, except the above materials of part are available on request by customer.

GENERAL DESCRIPTION

The most advantage of this type is for easy level reading of boiling liquids. in the event of liquids boiling, its bubbling makes indistinct the surface level. in this type of gauge with the larger volume of the liquid chamber will be reduced bubbling. Thereby this type should facilitate to read its level of bubbling liquids. it has also provides highly advantages for highly dense and viscous liquid. the body is made of seamless pipe.

SAM IL's Large Chamber Transparent Types are classified into four[4] models, those are STLG-1,2,3 & 4 according to process conditions which are max. working pressure & temperature [see page **G-4**].

This type is comprised of assembling order to fasten the nuts, set the sealing gasket, transparent glass, cushion gasket, gauge cover, bolts and nuts on the large chamber, in regular sequence.

STLG-1 & 2

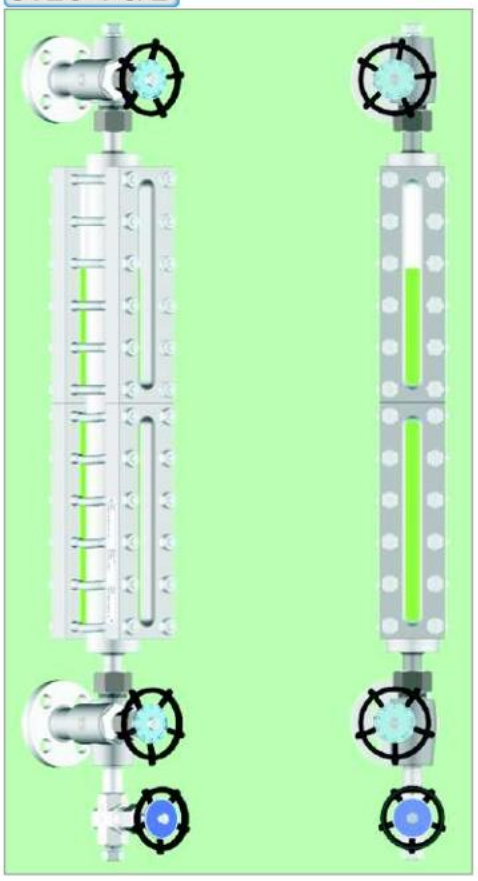

OPTIONS

- **Scale Plate**
  - units : Cm, Liter
- **Vent**
  - Needle Valve
  - Gate Valve
  - Globe Valve
  - Nipple & Cap
- **Drain**
  - Needle Valve
  - Gate Valve
  - Globe Valve
  - Nipple & Cap
- **Bracket**
  - Longer than 2000 mm of C to C
- **Gauge Valve**
  - Hand Wheel with Chain
  - Arm Lever

STLG-3 & 4

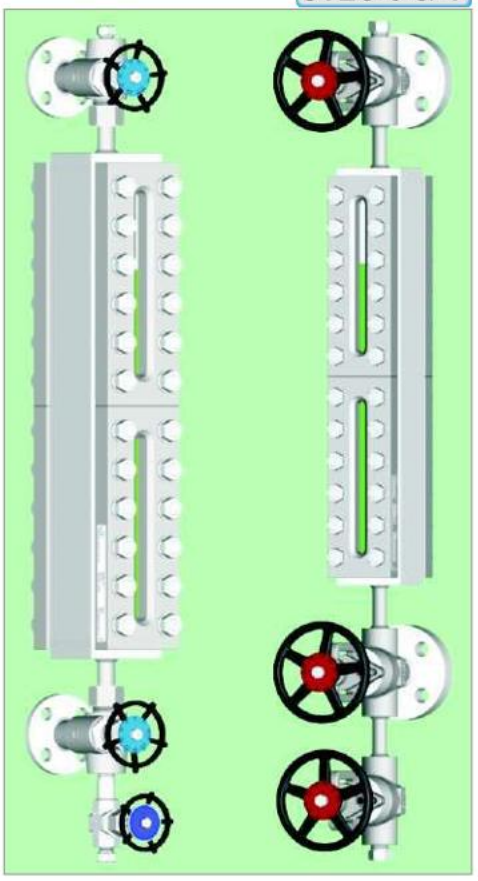

SPECIFICATIONS

- **MATERIAL** : C.S, LTCS, Stainless Steel, A182-F11, 22, 5, 9, 91 & Monel, Titanium, Hastelloy, Alloy-20, etc.
- **VISIBLE LENGTH** : 90 to 3510 mm.
- **MAX. NO. OF SECTION** : 10 Sections.
- **VESSEL CONNECTION** : 3/4" or 1" Flanged ANSI 150# ~ 2500# [900# ~ 2500# : Special Type].
- **GAUGE BODY & GAUGE VALVE CON'N** : Not Rotatable & 360° Rotatable [turn to page **G-9**].
- **SHELL TEST PRESSURE** : 1.5 Times at the Max. Working Pressure.

Others, except the above specification are available on request by customer.

This STLG is designed and manufactured for easy and accurate reading the liquid level of highly foamy liquids. the gauge has a relatively spacious internal area where foamy liquid is held from forming foams. thereby providing rather more accurate level observations.

SECTION FOR MODEL : STLG-1,2 & 3,4



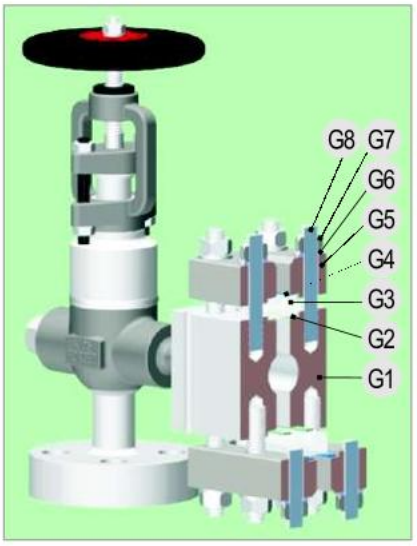

NO.	PARTS	MATERIAL	NO.	PART	MATERIAL
G1	Gauge Body	C.S, Stainless Steel	G5	Gauge Cover	C.S
G2	Sealing Gasket	Graphite, Non-Asbestos	G6	Washer	SWRH-62B
G3	Transparent Glass	Borosilicate	G7	Nuts	A194 Gr.2H
G4	Cushion Gasket	Non-Asbestos	G8	Bolts	A193 Gr.B7

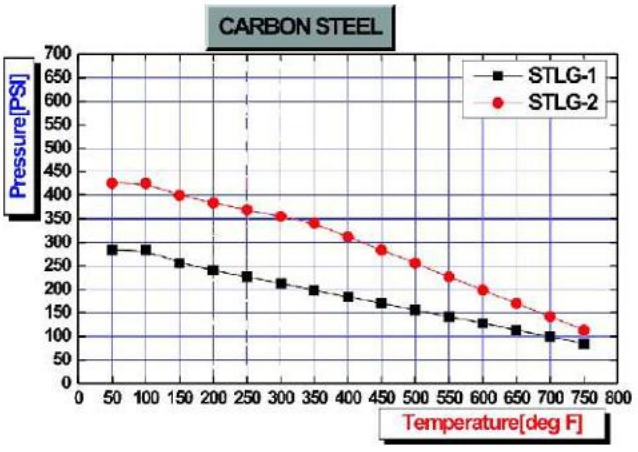

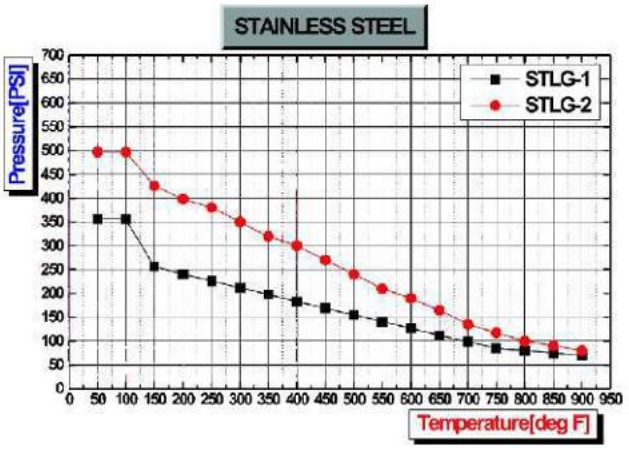

GAUGE CHAMBER PRESSURE - TEMPERATURE CHARTS FOR SAFETY OPERATING

Others, except the above materials of part are available on request by customer.

GENERAL DESCRIPTION

If a conventional level gauge is used for extremely low-temperature applications, it becomes difficult to observe the level of liquid as the gauge front tends to freeze. to get rid of this problem, the acrylic non-frosting plate window is mounted in the front of the gauge like as below and you will observe the level easily far better.
SAM IL's Non-Frosting Transparent Types are classified into two[2] types, Models are STNG-1,2,3 & 4 and STLNG-1,2,3 & 4 according to process conditions [see page **G-4**]. depending on the working temperature conditions, the height of the Non-Frosting plate window may be selected from 75 to 250 mm.
This type is comprised of assembling order to fasten the nuts, set the sealing gasket, transparent glass, cushion gasket, gauge cover, bolts and nuts on the Transparent Body, in regular sequence and then the Non-Frosting plate is mounted on it.

STNG-1,2,3 & 4

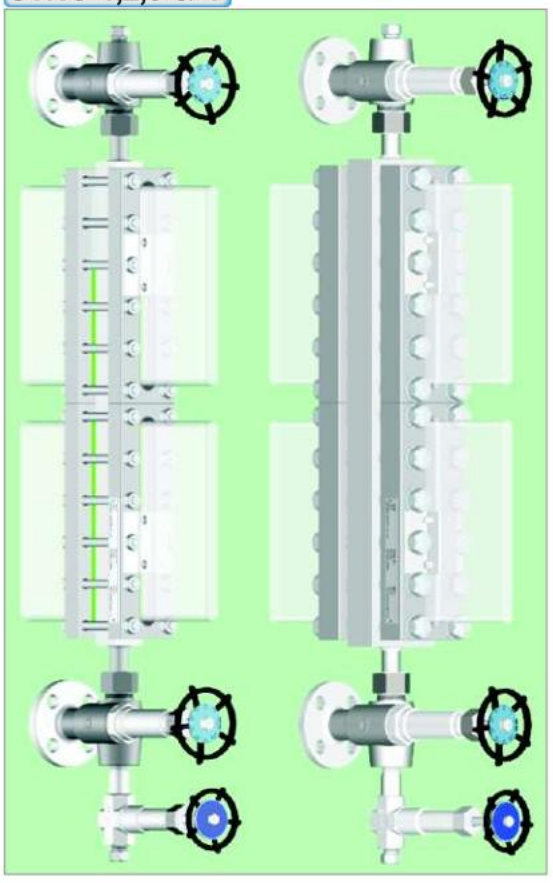

OPTIONS

- **Scale Plate**
  - units : Cm, Liter
- **Vent**
  - Needle Valve
  - Gate Valve
  - Globe Valve
  - Nipple & Cap
- **Drain**
  - Needle Valve
  - Gate Valve
  - Globe Valve
  - Nipple & Cap
- **Bracket**
  - Longer than 2000 mm of C to C
- **Gauge Valve**
  - Hand Wheel with Chain
  - Arm Lever

STLNG-1,2,3 & 4



SPECIFICATIONS

- **MATERIAL** : LTCS & Stainless Steel.
- **VISIBLE LENGTH** : 90 to 3510 mm.
- **MAX. NO. OF SECTION** : 10 Sections.
- **VESSEL CONNECTION** : 3/4" or 1" Flanged ANSI 150# ~ 2500# .
- **GAUGE BODY & GAUGE VALVE CON'N** : Not Rotatable & 360° Rotatable [turn to page **G-9**].
- **SHELL TEST PRESSURE** : 1.5 Times at the Max. Working Pressure.

Others, except the above specification are available on request by customer.

These STNG and STLNG is used for protecting the frost at low-temperature. thereby you can easily read level position through these STNG & STLNG Models.

SECTION FOR MODEL : STNG-1,2 & 3,4

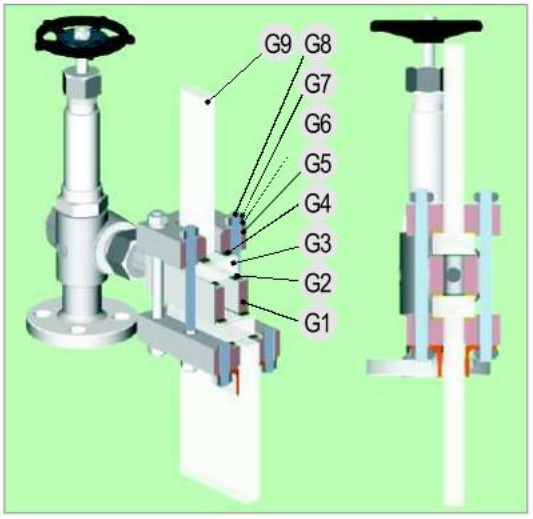

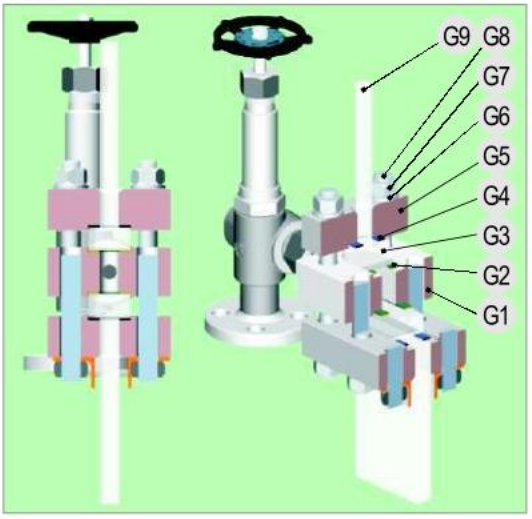

NO.	PARTS	MATERIAL	NO.	PART	MATERIAL
G1	Gauge Body	LTCS, Stainless Steel	G5	Gauge Cover	LTCS, Stainless Steel
G2	Sealing Gasket	Non-Asbestos	G6	Washer	SWRH-62B
G3	Transparent Glass	Borosilicate	G7	Nuts	A194 Gr.2H, A194 Gr.4
G4	Cushion Gasket	Non-Asbestos	G8	Bolts	A193 Gr.B7, A320 Gr.L7
			G9	Non - Frosting	Acrylic

SECTION FOR MODEL : STLNG-1,2 & 3,4

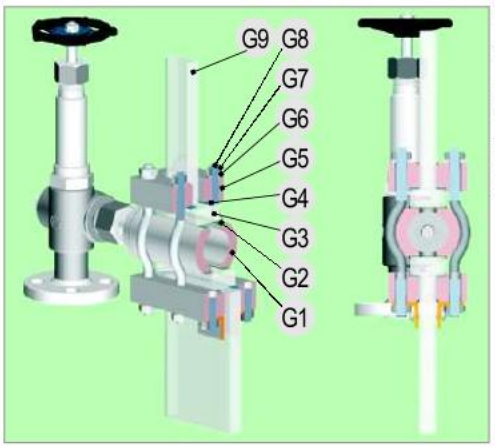

Since these types are used at a temperature below freezing point, gauge valve and drain valve is used with long bonnet type for preventing chilblains on your hands.

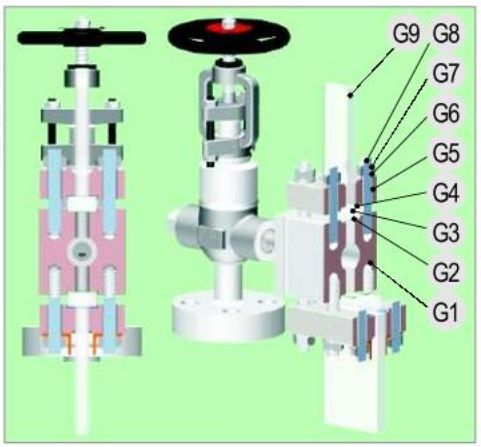

TEMPERATURE RATING & DIMENSIONS OF NON-FROSTING PLATES

Temperature [°C]	0 ~ -20	-21 ~ -45	-46 ~ -100	-101 ~ -160	-161 ~ -200
Materials	LTCS	LTCS	304SS	316SS	316LSS
Acrylic Height [H]	75	100	150	200	250

Others, except the above materials of part are available on request by customer.

GENERAL DESCRIPTION

This type is usually called a Jacket Type. This gauge is used to read the level of highly congealable or ebullient liquids. The principle is to inflow a steam for congealable liquids and a cold water for ebullient liquids through the inside of the jacket to ensure accurate and reliable level observation.

SAM IL's Jacket Transparent Types are classified into two[2] types, Models are STJG-1,2,3 & 4 and STLJG-1,2,3 & 4 according to process conditions which are max. working pressure & temperature [see page **G-4**].

This type is comprised of assembling order to fasten the nuts, set the sealing gasket, transparent glass, cushion gasket, gauge cover, bolts and nuts in regular sequence, on the Transparent Body equipped with Jacket for heating and cooling. The gauge body shape of STJG-1 & 2 have the same with it of STJG-3 & 4 taking account of facilities of the jacket construction. Semi-Jacket may also be installed on the gauge body only, without gauge valve.

STJG-1,2,3 & 4

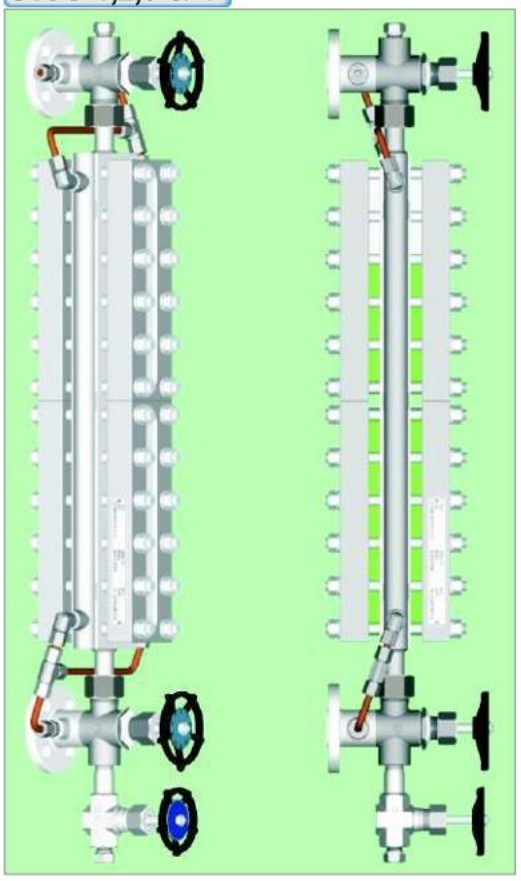

OPTIONS

- **Scale Plate**
  - units : Cm, Liter
- **Vent**
  - Needle Valve
  - Gate Valve
  - Globe Valve
  - Nipple & Cap
- **Drain**
  - Needle Valve
  - Gate Valve
  - Globe Valve
  - Nipple & Cap
- **Bracket**
  - Longer than 2000 mm of C to C
- **Gauge Valve**
  - Hand Wheel with Chain
  - Arm Lever

STLJG-1,2,3 & 4

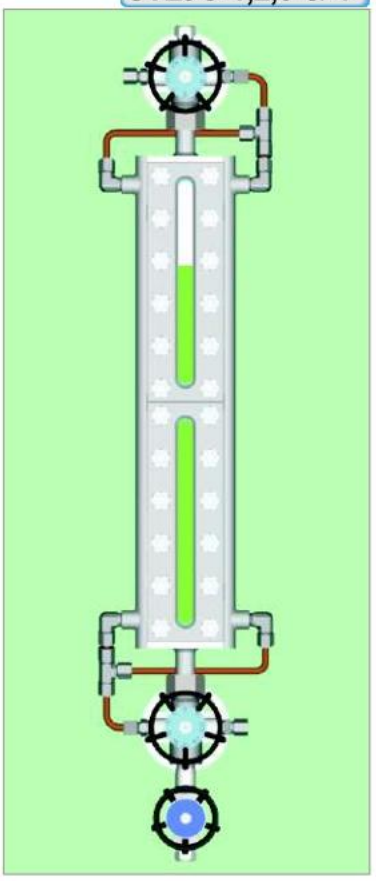

SPECIFICATIONS

- **MATERIAL** : C.S, LTCS, Stainless Steel, A182-F11,22,5,9,91 & Monel, Titanium, Hastelloy, Alloy-20, etc.
- **VISIBLE LENGTH** : 90 to 3510 mm.
- **MAX. NO. OF SECTION** : 10 Sections.
- **VESSEL CONNECTION** : 3/4" or 1" Flanged ANSI 150# ~ 2500#.
- **GAUGE BODY & GAUGE VALVE CON'N** : Not Rotatable & 360° Rotatable [turn to page **G-9**].
- **SHELL TEST PRESSURE** : 1.5 Times at the Max. Working Pressure.

Others, except the above specification are available on request by customer.

This type is used for observing the fluid by changing it into state of liquid after heating or cooling it through jacket according to features of fluid.
of **SAM IL** standard, the entrance of Jacket for inflowing a steam or cold water is 1/2" NPT[M]. other entrance sizes for the Jacket connection are available on request by customers.

Steam or Cooling Media is circulated through the Jacket.

SECTION FOR MODEL : STJG-1,2,3 & 4

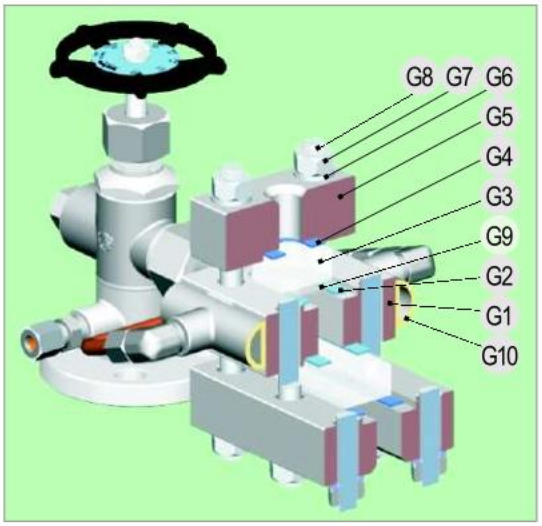

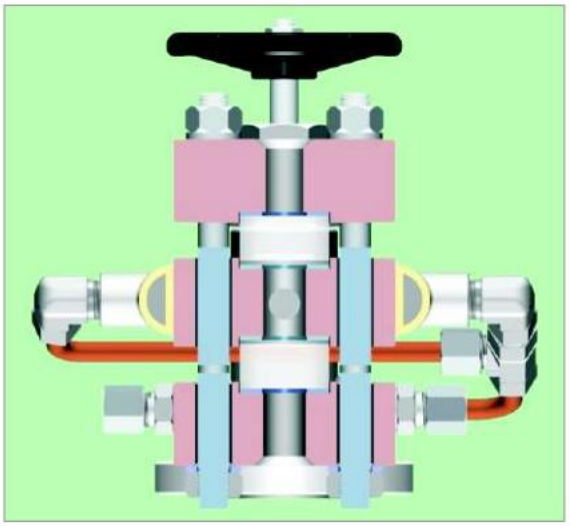

NO.	PARTS	MATERIAL	NO.	PART	MATERIAL
G1	Gauge Body	C.S, Stainless Steel	G6	Washer	SWRH-62B
G2	Sealing Gasket	Graphite, Non-Asbestos	G7	Nuts	A194 Gr.2H
G3	Transparent Glass	Borosilicate	G8	Bolts	A193 Gr.B7
G4	Cushion Gasket	Non-Asbestos	G9	Shield	Mica
G5	Gauge Cover	C.S	G10	Jacket Pipe	C.S or Stainless Steel

Others, except the above materials of part are available on request by customer.

GENERAL DESCRIPTION

The most advantage of this type have no invisible sections [Dead Band]. **SAM IL**'s standard overlapped section is ten [10] mm as minimum and the gauge is so designed that supporting brackets as illustrated on next page can be equipped to protect a long multiple connected gauge from distortion of fall down. The scale plate to mount along side the gauge may be available on request by customers to observe the liquid level more accurately.
This type is comprised of assembling order to fasten the nuts, set the sealing gasket, transparent glass, cushion gasket, gauge cover, bolts and nuts on the Transparent Body after making Zig-Zag formed the body.

STZG-1 & 2

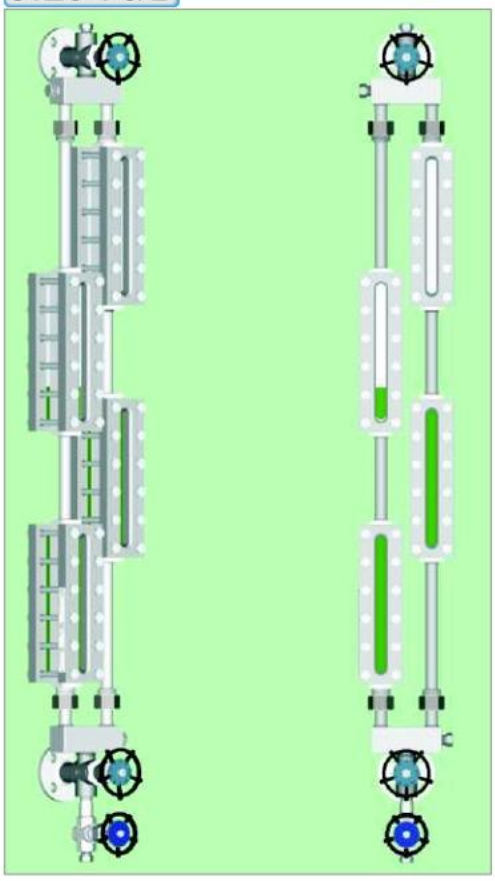

OPTIONS

- **Scale Plate**
  - units : Cm, Liter
- **Vent**
  - Needle Valve
  - Gate Valve
  - Globe Valve
  - Nipple & Cap
- **Drain**
  - Needle Valve
  - Gate Valve
  - Globe Valve
  - Nipple & Cap
- **Bracket**
  - Longer than 2000 mm of C to C
- **Gauge Valve**
  - Hand Wheel with Chain
  - Arm Lever

STZG-3 & 4

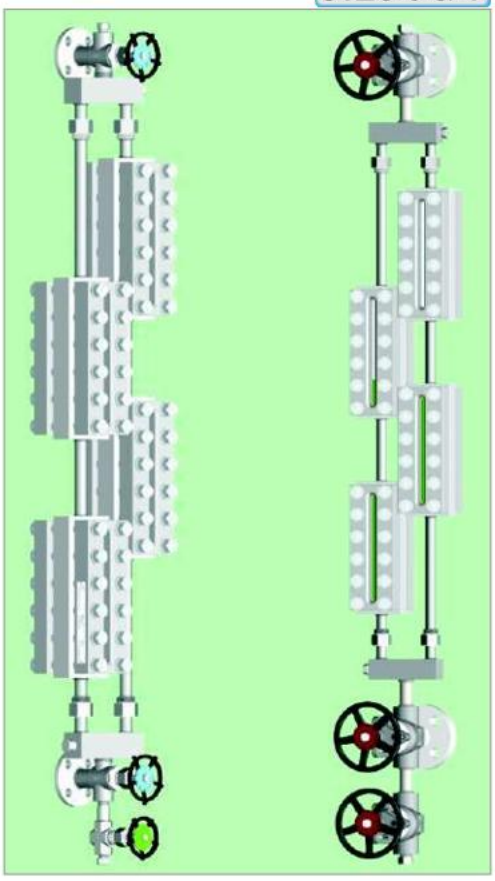

SPECIFICATIONS

- **MATERIAL** : C.S, LTCS, Stainless Steel, A182-F11, 22, 5, 9, 91 & Monel, Titanium, Hastelloy, Alloy-20, etc.
- **VISIBLE LENGTH** : Max. 6050 mm.
- **MAX. NO. OF SECTION** : 20 Sections.
- **VESSEL CONNECTION** : 3/4" or 1" Flanged ANSI 150# to 2500#.
- **GAUGE BODY & GAUGE VALVE CON'N** : Not Rotatable & 360° Rotatable [turn to page **G-9**].
- **SHELL TEST PRESSURE** : 1.5 Times at the Max. Working Pressure.

Others, except the above specification are available on request by customer.

SECTION FOR MODEL : STZG-1 & 2

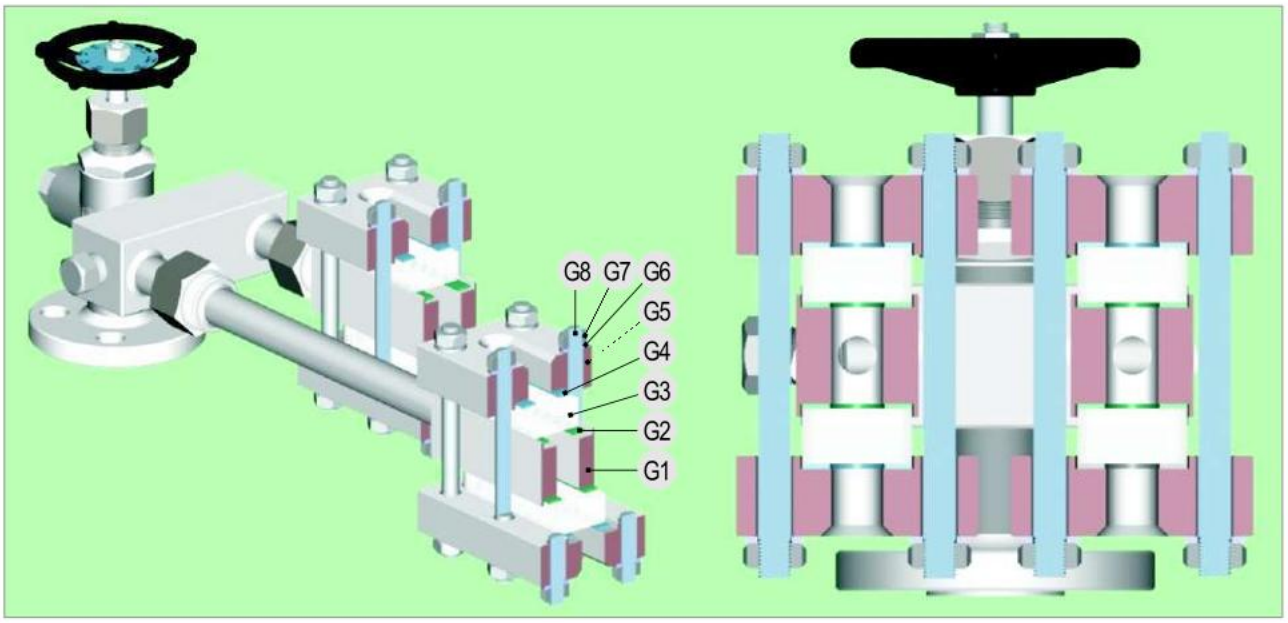

NO.	PARTS	MATERIAL	NO.	PART	MATERIAL
G1	Gauge Body	C.S, Stainless Steel	G5	Gauge Cover	C.S
G2	Sealing Gasket	Graphite, Non-Asbestos	G6	Washer	SWRH-62B
G3	Transparent Glass	Borosilicate	G7	Nuts	A194 Gr.2H
G4	Cushion Gasket	Non-Asbestos	G8	Stud - Bolts	A193 Gr.B7

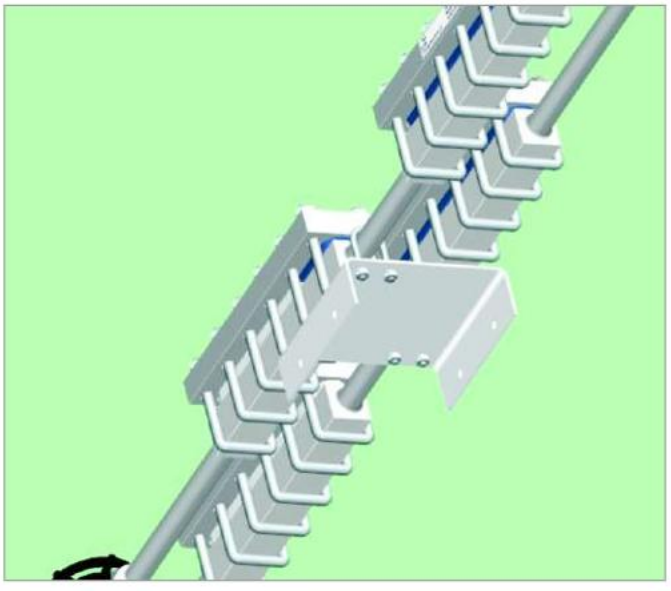

1. Details of the Bracket dimension will be indicated on the drawing for submittal and may be changed on request by customers.

2. As shown on the left-hand side illustrated, this is SAM IL's standard and you can connect the supporting from our supporting bracket to Vessel.

3. Bracket for supporting is built on this model for **7** gauges(= **7**sections) and over as standard.

4. Assembly - Dismantling on the body is easy.

5. The feature of bracket and its installation method may change in order to facilitate the construction.

Others, except the above materials of part are available on request by customer.

SECTION FOR MODEL : STZG-3 & 4

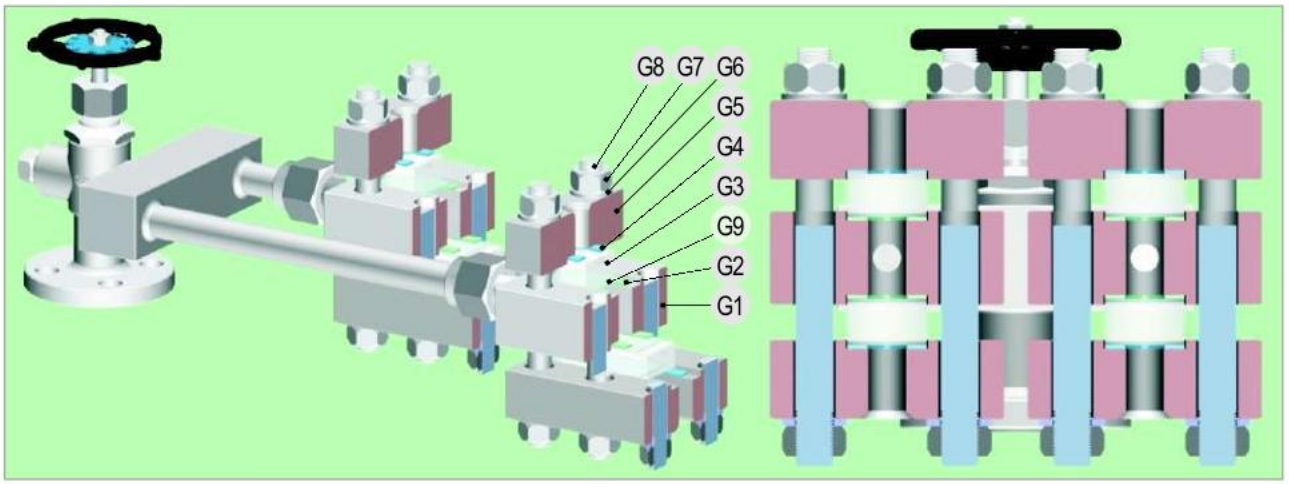

NO.	PARTS	MATERIAL	NO.	PART	MATERIAL
G1	Gauge Body	C.S, Stainless Steel	G5	Gauge Cover	C.S
G2	Sealing Gasket	Graphite, Non-Asbestos	G6	Washer	SWRH-62B
G3	Transparent Glass	Borosilicate	G7	Nuts	A194 Gr.2H
G4	Cushion Gasket	Non-Asbestos	G8	Stud - Bolts	A193 Gr.B7
			G9	Shield	Mica

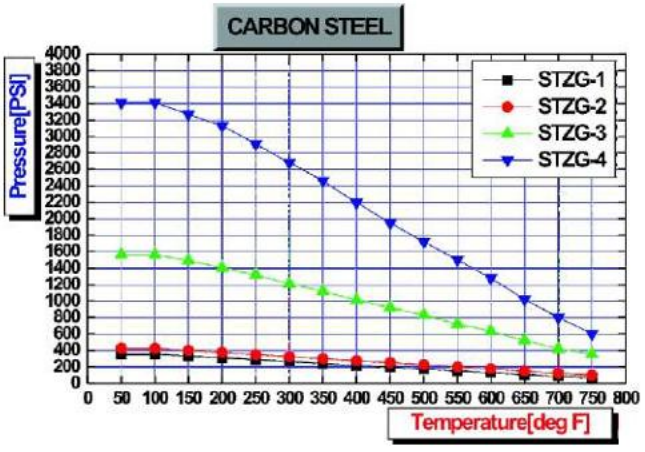

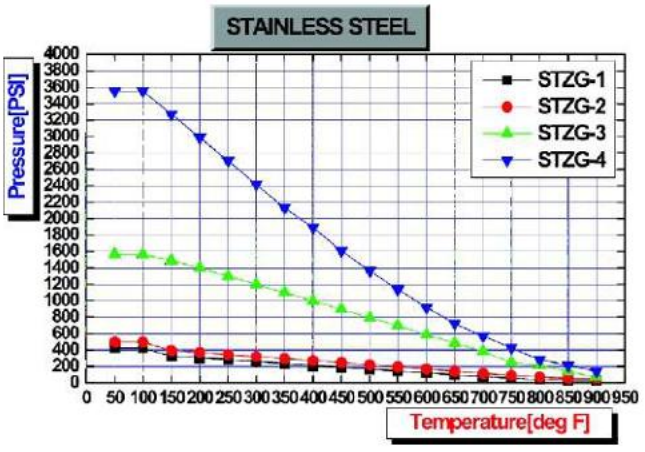

GAUGE CHAMBER PRESSURE - TEMPERATURE CHARTS FOR SAFETY OPERATING

Others, except the above materials of part are available on request by customer.

SOLID DRAWING & DIMENSIONS

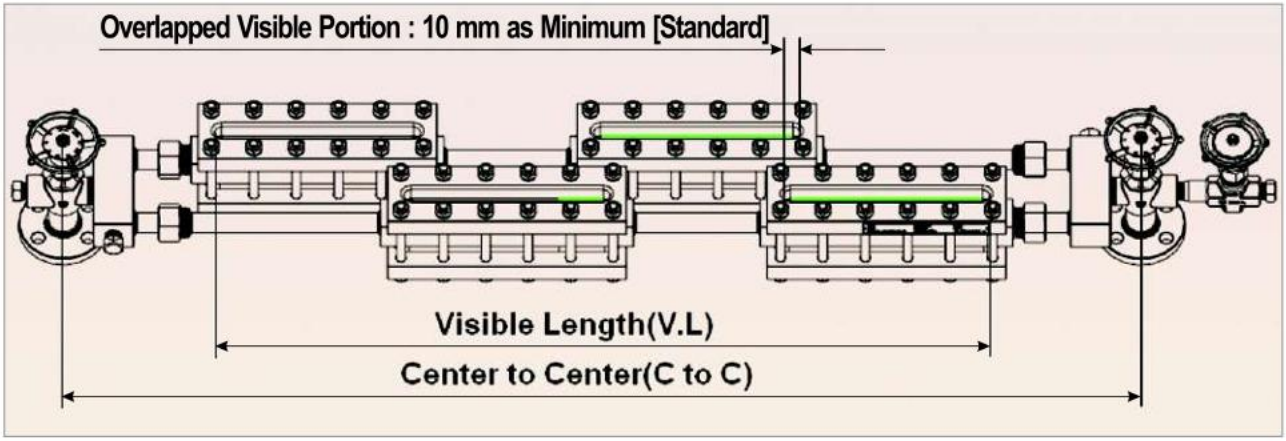

No. of Gauge Sections	Glass No. - 7		Glass No. - 8		Glass No. - 9	
	C TO C [mm]	V•L [mm]	C TO C [mm]	V•L [mm]	C TO C [mm]	V•L [mm]
2 Gauges	800	500	880	580	920	620
3 Gauges	1040	740	1160	860	1220	920
4 Gauges	1290	990	1450	1150	1520	1220
5 Gauges	1530	1230	1720	1420	1820	1520
6 Gauges	1770	1470	2000	1700	2120	1820
7 Gauges	2000	1700	2300	2000	2420	2120
8 Gauges	2250	1950	2550	2250	2720	2420
9 Gauges	2500	2200	2850	2550	3020	2720
10 Gauges	2750	2450	3100	2800	3300	3000
11 Gauges	3000	2700	3400	3100	3600	3300
12 Gauges	3200	2900	3700	3400	3900	3600
13 Gauges	3450	3150	3950	3650	4200	3900
14 Gauges	3700	3400	4250	3950	4500	4200
15 Gauges	3950	3650	4550	4250	4800	4500
16 Gauges	4200	3900	4800	4500	5100	4800
17 Gauges	4400	4100	5100	4800	5400	5100
18 Gauges	4650	4350	5400	5100	5700	5400
19 Gauges	4900	4600	5650	5350	6000	5700
20Gauges	5100	4800	5900	5600	6300	6000

Visible + 300 mm = C to C [For Gauge Valve Model : SS, SO, SB at Page **G-9**].

Others, except the above dimensions are available on request by customer.

GENERAL DESCRIPTION

More severe demands may be often required on liquid level gauges in terms of resistance to corrosion, and this is accomplished by lining or coating all parts to contact with the liquid. The most important aspect of this process is the preparation of the metal substrate. For this, **SAM IL** employs only the latest machinery and highly an expert personnel.

SAM IL's Lined Transparent Types are classified into two[2] models, Models are STG-1LD and STLG-1LD due to the properties of fluids [see page **G-4**].

This type is comprised of assembling order to fasten the nuts, set the sealing gasket, transparent glass, cushion gasket, gauge cover, bolts and nuts in regular sequence, on the Transparent Body to Lined.

STG-1LD

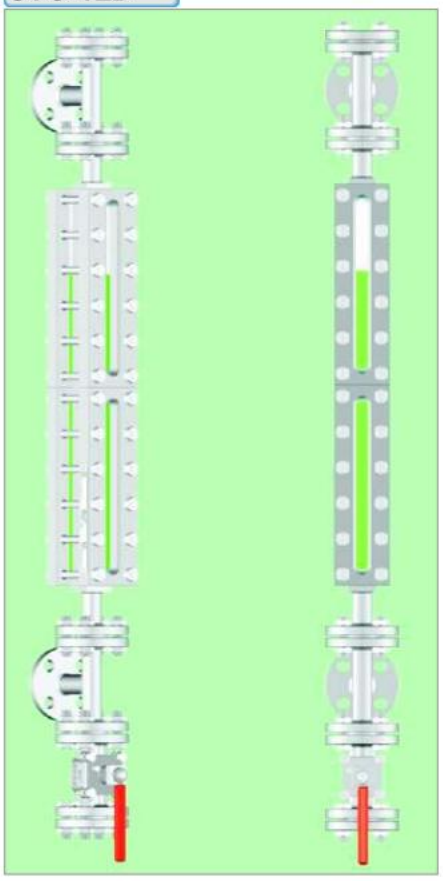

OPTIONS

- **Scale Plate**
  - units : Cm, Liter
- **Bracket**
  - Longer than 2000 mm of C to C

STLG-1LD

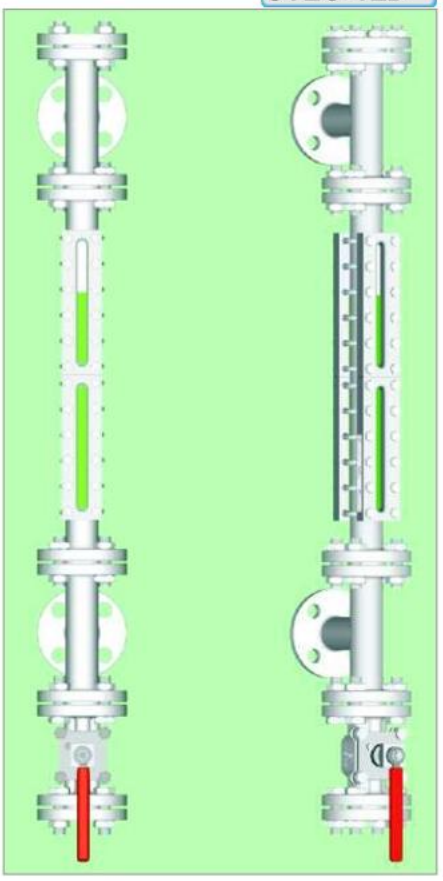

SPECIFICATIONS

- **MATERIAL** : Carbon Steel & Stainless Steel
- **VISIBLE LENGTH** : 90 to 3510 mm.
- **MAX. NO. OF SECTION** : 10 Sections.
- **VESSEL CONNECTION** : 3/4" to 2" Flanged ANSI 150# ~ 300#.
- **SHELL TEST PRESSURE** : 1.5 Times at the Max. Working Pressure.

Others, except the above specification are available on request by customer.

Block Valve, Drain and Vent Valve of Lined Transparent Type are available on Plug Valve, etc., any request.

SECTION FOR MODEL : STG-LD

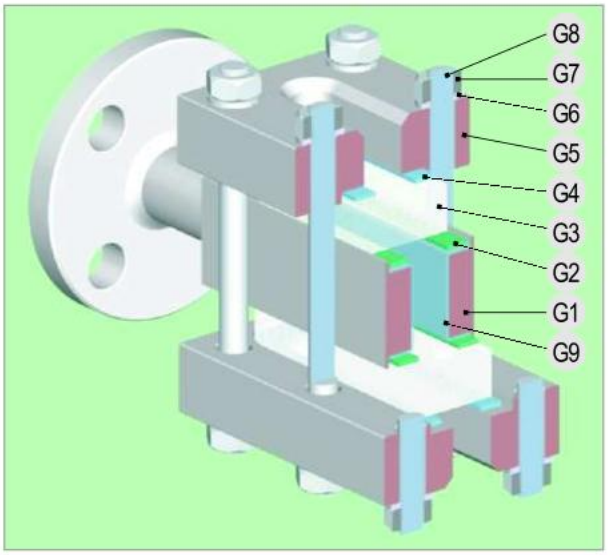

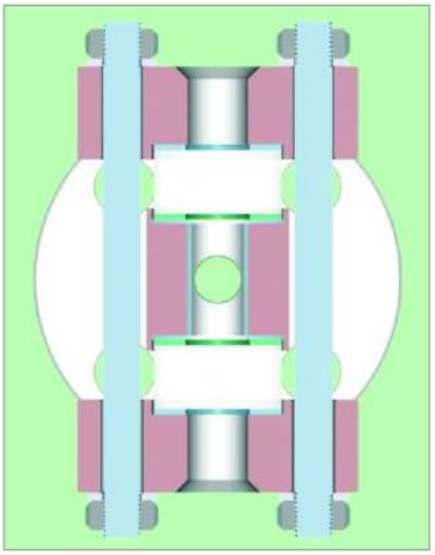

NO.	PARTS	MATERIAL	NO.	PART	MATERIAL
G1	Gauge Body	C.S, Stainless Steel	G5	Gauge Cover	C.S
G2	Sealing Gasket	Rubber, Soft Teflon	G6	Washer	SWRH-62B
G3	Transparent Glass	Borosilicate	G7	Nuts	A194 Gr.2H
G4	Cushion Gasket	Non-Asbestos	G8	Bolts	A193 Gr.B7
			G9	Lining	Hard Rubber, Teflon

SECTION FOR MODEL : STLG-LD

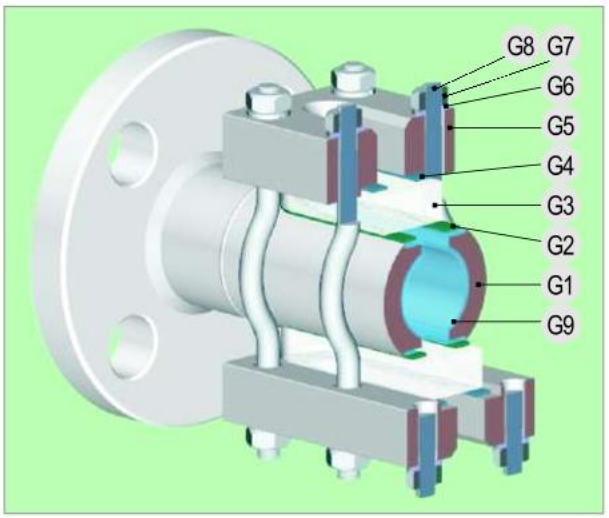

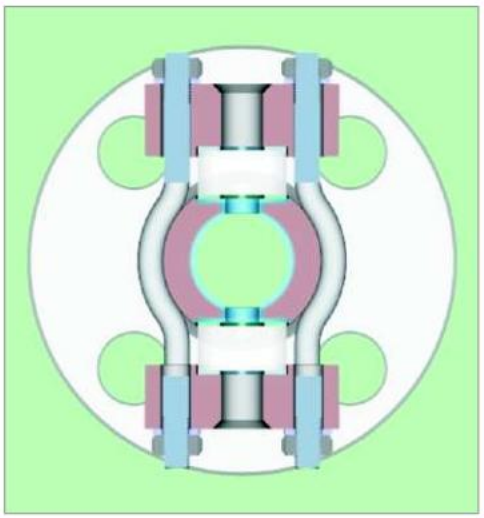

Others, except the above materials of part are available on request by customer.

GENERAL DESCRIPTION

This gauge is used with a special reflex type sight glass which has wider V - Shaped single refractive groove and red coating on the outside all of the glass. It provides a clear observation of liquid level because of made refracting red color on the V - Groove for steam or beyond portion of the level and its color of fluid itself for liquid portions.
SAM IL's Bi-Color Transparent Types are classified into two[2] models, those are STG-1 & 2BC according to process conditions which are max. working pressure & temperature [see page **G-4**].
This type is comprised of assembling order to fasten the nuts, set the sealing gasket, transparent glass in rear of, V-shaped special reflex glass in front of, cushion gasket, gauge cover, bolts and nuts on the transparent body, in order.

STG-1BC

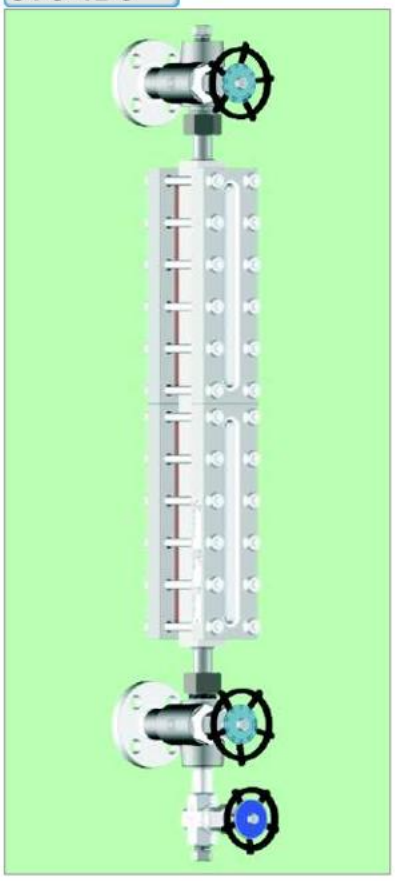

OPTIONS

- **Scale Plate**
  - units : Cm, Liter
- **Vent**
  - Needle Valve
  - Gate Valve
  - Globe Valve
  - Nipple & Cap
- **Drain**
  - Needle Valve
  - Gate Valve
  - Globe Valve
  - Nipple & Cap
- **Bracket**
  - Longer than 2000 mm of C to C
- **Gauge Valve**
  - Hand Wheel with Chain
  - Arm Lever

STG-2BC

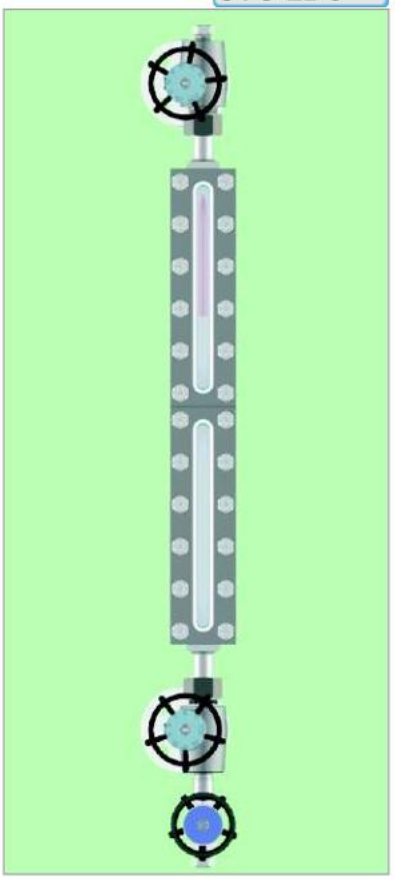

SPECIFICATIONS

- **MATERIAL** : C.S, LTCS, Stainless Steel, A182-F11, 22, 5, 9, 91 & Monel, Titanium, Hastelloy, Alloy-20, etc.
- **VISIBLE LENGTH** : 90 to 3510 mm.
- **MAX. NO. OF SECTION** : 10 Sections.
- **VESSEL CONNECTION** : 3/4" or 1" Flanged ANSI 150# ~ 600# .
- **GAUGE BODY & GAUGE VALVE CON'N** : Not Rotatable & 360° Rotatable [turn to page **G-9**].
- **SHELL TEST PRESSURE** : 1.5 Times at the Max. Working Pressure.

Others, except the above specification are available on request by customer.

SECTION FOR MODEL : STG-1 & 2BC

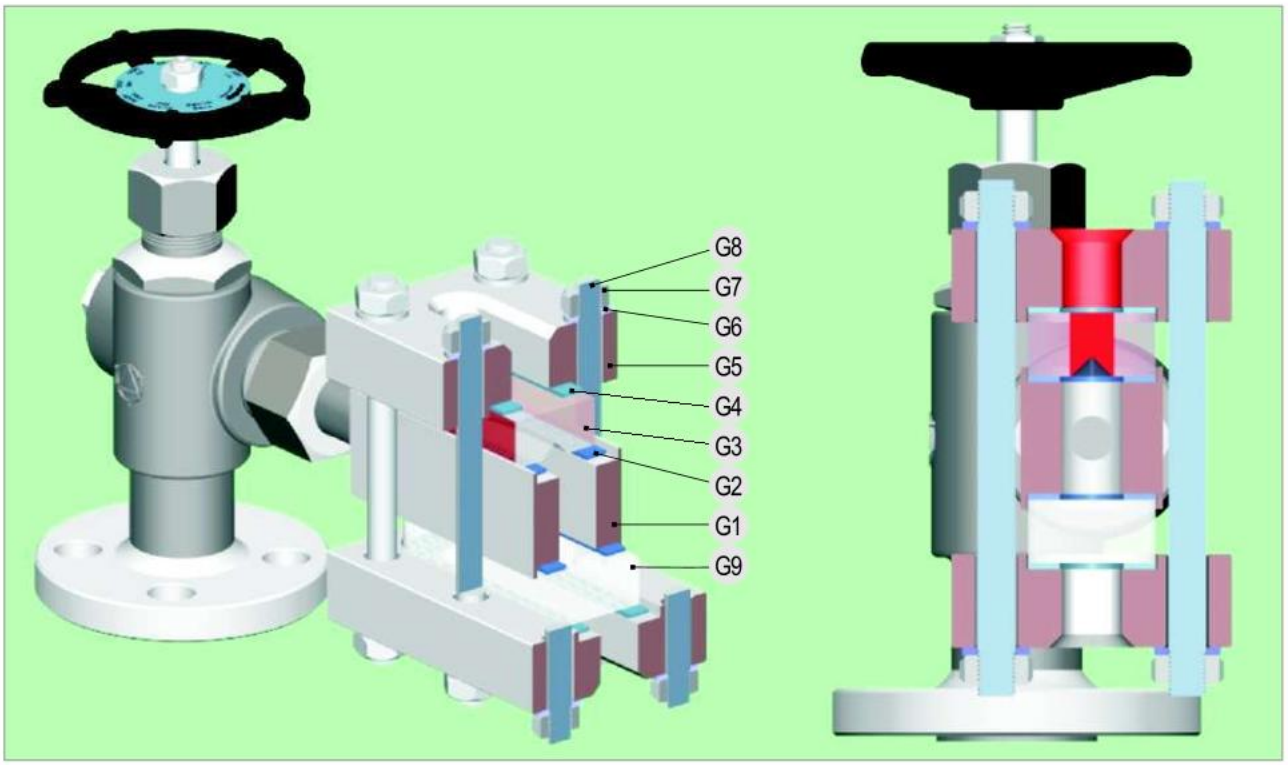

NO.	PARTS	MATERIAL	NO.	PART	MATERIAL
G1	Gauge Body	C.S, Stainless Steel	G5	Gauge Cover	C.S
G2	Sealing Gasket	Graphite, Non-Asbestos	G6	Washer	SWRH-62B
G3	Bi-Color Reflex Glass	Borosilicate	G7	Nuts	A194 Gr.2H
G4	Cushion Gasket	Non-Asbestos	G8	Stud - Bolts	A193 Gr.B7
			G9	Transparent Glass	Borosilicate

Others, except the above materials of part are available on request by customer.

GENERAL DESCRIPTION

Features and Principles of this type is the same with basic Transparent Gauges except for the fact that the illuminator is mounted on the Transparent Gauge. Transparent Type with illuminator of **SAM IL** is useful for observing the fluid in a dim place or at night by using an explosion-proof and weather-proof.
The illuminator is possible to construct on all Transparent Models and STG-IL Model is shown as below.

STG-IL

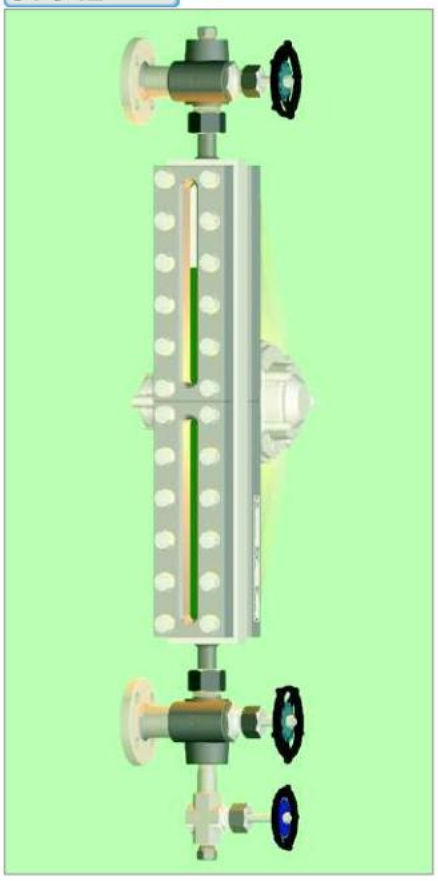

OPTIONS

- **Scale Plate**
  - units : Cm, Liter
- **Vent**
  - Needle Valve
  - Gate Valve
  - Globe Valve
  - Nipple & Cap
- **Drain**
  - Needle Valve
  - Gate Valve
  - Globe Valve
  - Nipple & Cap
- **Bracket**
  - Longer than 2000 mm of C to C
- **Gauge Valve**
  - Hand Wheel with Chain
  - Arm Lever

STG-IL



SPECIFICATIONS

- **MATERIAL** : C.S, LTCS, Stainless Steel, A182-F11, 22, 5, 9, 91 & Monel, Titanium, Hastelloy, Alloy-20, etc.
- **VISIBLE LENGTH** : 90 to 3510 mm.
- **MAX. NO. OF SECTION** : 10 Sections.
- **VESSEL CONNECTION** : 3/4" or 1" Flanged ANSI 150# ~ 2500# .
- **GAUGE BODY & GAUGE VALVE CON'N** : Not Rotatable & 360° Rotatable [turn to page **G-9**].
- **SHELL TEST PRESSURE** : 1.5 Times at the Max. Working Pressure.

Others, except the above specification are available on request by customer.

SECTION FOR MODEL : STG-IL

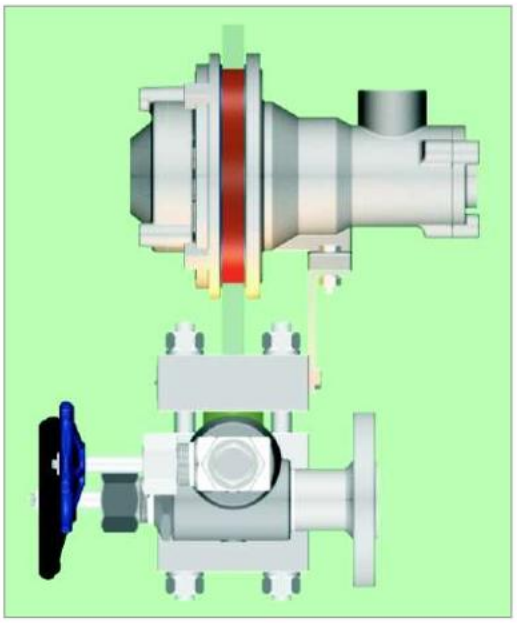

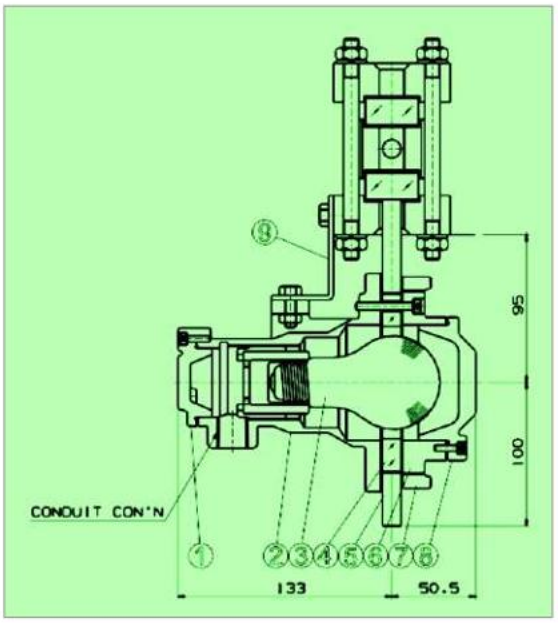

NO.	PARTS
1	Cover
2	Bulb Hosing
3	Bulb
4	Glass Plate
5	Reflector
6	Glass Cover
7	Front Cover
8	Bulb Cover
9	Bracket

CONDUIT CON'N DIMENSION		
Size [PT,NPT]	Outside Diameter [mm]	Thread per Inch
1/2"	21.34	14
3/4"	26.67	14
1"	33.40	11 1/2
Size	**Major Diameter [mm]**	**Pitch [mm]**
M16	15.97	1.5
M20	19.97	1.5
M25	24.97	1.5

ELECTRICITY

STANDARD :

- **Voltage** : AC 110~220V, 50Hz, 60Hz.
- **Bulb Light** : 30W~100W.
- **Explosion-Proof** : Ex d ⅡB + H_2 T5

- **Others** : The Certificate of Explosion-Proof : Division 1 and 2 ; Class Ⅰ : Group B, C, D ;
  Class Ⅱ : Group E, F, G ;
  Class Ⅲ : Type 4 at FM Approved.
  Division 1 and 2 ; Class Ⅰ : Group B, C, D ;
  Class Ⅱ : Group E, F, G ;
  Class Ⅲ : Type 4 at CSA Certified Ex d.

: The Certificate of CENELEC is available on EExd ⅡB + H_2 T4, IP66.
: The Certificate of U.L is available on Class Ⅰ : Groups C and D Temp. Code T4A ; Division 1.
Class Ⅰ : Group B Temp. Code T2A : Division 2.

Others, except the above SAM IL's standard electricity are available on request by customer.

GENERAL DESCRIPTION

These gauge bodies are made suitable for welding directly to the vessel. Therefore, No cocks can be fitted between vessel and gauge.
The tables below show visible length and depending upon the application, extra-long types are also available. in case of glass breakage, as the fluid flowing from the vessel can not be stopped, it must keep within the maximum operating pressure absolutely for preventing the glass breakage.

SWPG-1

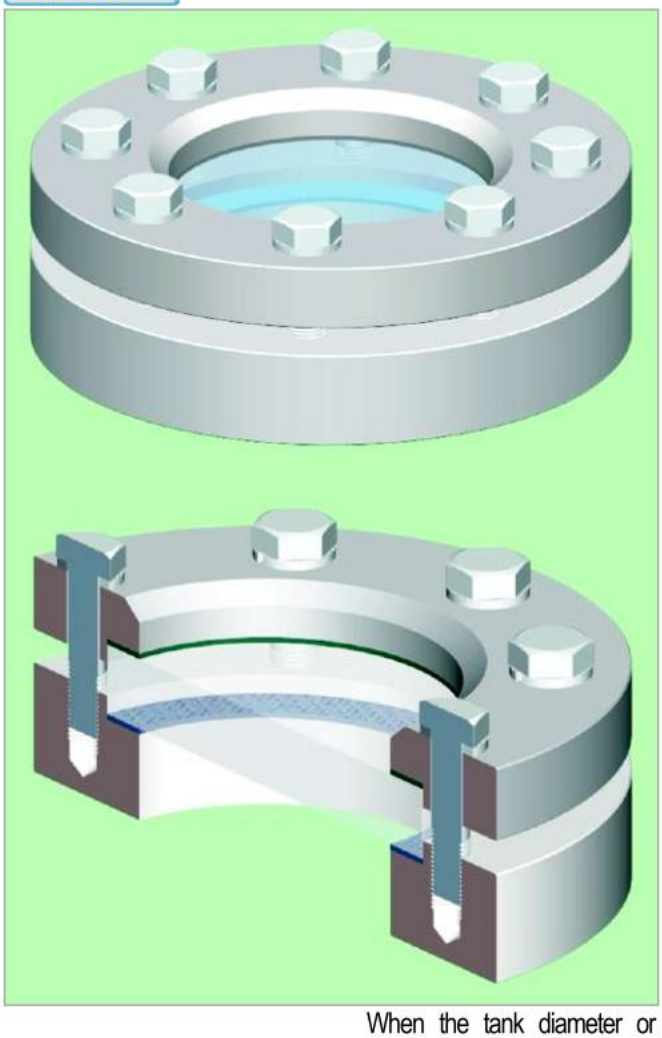

TYPE	VISIBLE DIAMETER	BODY DIAMETER
W-20	20	75
W-25	25	80
W-40	40	100
W-50	50	110
W-70	70	135
W-80	80	145
W-90	90	155
W-100	100	185
W-130	130	210
W-160	160	240
W-200	200	280

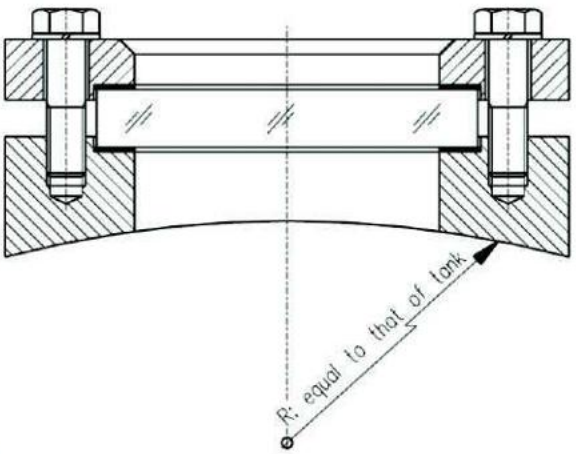

When the tank diameter or radius informed us and is request, **SAM IL** will make this machining like as shown the right-side hand illustrated.

SPECIFICATIONS

- **MATERIAL** : C.S, LTCS & Stainless Steel, etc.
- **VISIBLE DIAMETER** : 20 to 200 mm.
- **MAX. NO. OF SECTION** : 1 Sections.
- **VESSEL CONNECTION** : Direct Welding on the Vessel
- **MAX. WORKING PRESSURE** : 142 psi [as standard based on dimensions at the above table].
- **OTHERS** : Special Types are available up to 426 psi [30 kg/cm^2] on request.

Others, except the above specification are available on request by customer.

During the welding operation, take care not to expose the gauge body for long time to high temperature, as this might damage the flatness of the glass sealing surface.

This type also can be designed and manufactured as a regular square and an oval form. Others, except below our standard dimensions, of **V.L, V.W, B.L, B.W** [Body Width] are also available on request.

SWPG-2

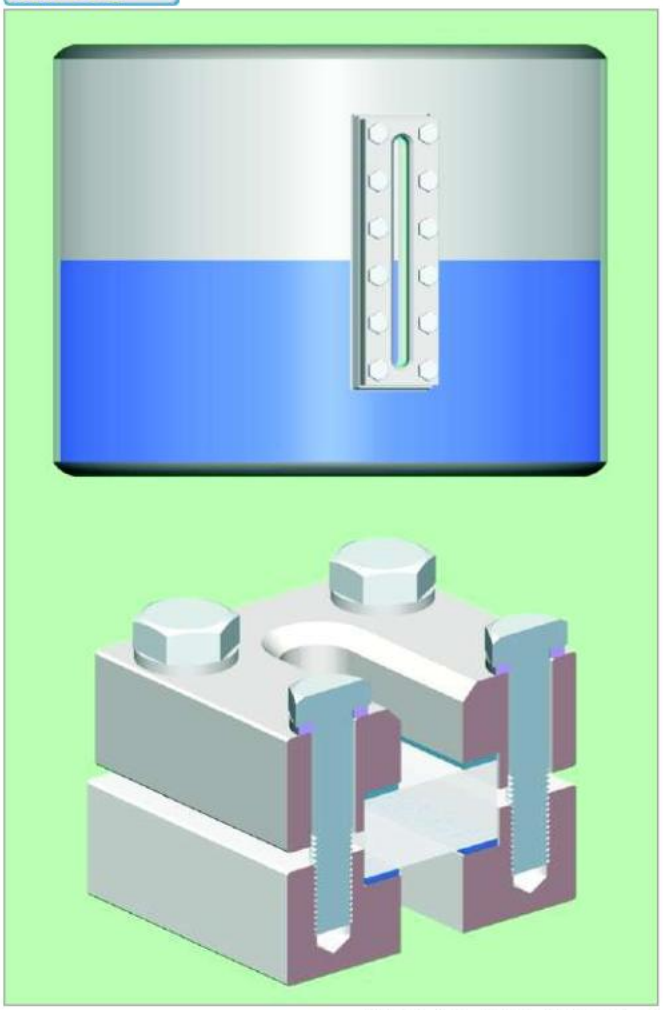

TYPE	V.L	V.W	B.L
R-3 / T-3	140	16	185
R-4 / T-4	165	16	210
R-5 / T-5	195	16	240
R-6 / T-6	225	16	270
R-7 / T-7	255	16	300
R-8 / T-8	295	16	340
R-9 / T-9	315	16	360
R-10 / T-10	375	16	420

R : Reflex Glass
T : Transparent Glass

V.L : Visible Length
V.W : Visible Width
B.L : Gauge Body Length

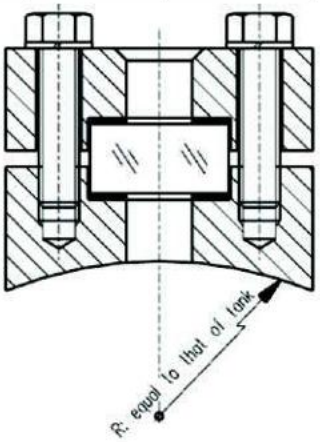

When the tank diameter or radius informed us and is request, **SAM IL** will make this machining like as shown the right-side hand illustrated.

SPECIFICATIONS

- **MATERIAL** : C.S, LTCS & Stainless Steel, etc.
- **VISIBLE LENGTH** : 90 to 375 mm.
- **MAX. NO. OF SECTION** : 5 Sections.
- **VESSEL CONNECTION** : Direct Welding on the Vessel.
- **MAX. WORKING PRESSURE** : 426 psi [as standard based on dimensions at the above table].
- **OTHERS** : Special Types are available up to 853 psi [60 kg/cm^2] on request.

Others, except the above specification are available on request by customer.

ENQUIRY- / ORDER FORM FOR PRODUCTS

TO : SAM IL INDUSTRY CO.,LTD.	FROM :
WEB PAGE : www.samilind.co.kr	WEB PAGE :
E - MAIL : samilind79@samilind.co.kr	E - MAIL :
TEL NO. : 82-2-2618-2000 ~4, 82-32-819-9671 ~ 7	TEL NO. :
FAX NO. : 82-32-819-9693 ~4	FAX NO. :

We are pleased to receive this enquiry- / order form for products from your company.

SPECIAL REQUIREMENTS :

OUTLINE DRAWING [IF NECESSARY] :

www.samilind.co.kr
samilind79@samilind.co.kr

DATA SHEET

SINCE 1979
SAM IL INDUSTRY CO.,LTD.

LEVEL GAUGE
[REFLEX & TRANSPARENT TYPE]

NO.	BY	DATE	REVISION

SHEET : OF
SPEC. NO. REV.
CONTRACT DATA
REQ. P.O.
BY CHK'D APPR.

		1	Item No.	1	2	3	4
GENERAL	✶	2	Tag No.				
	✶	3	Q'TY				
		4	Model No.				
FLUID DATA	✶	5	Fluid Name				
	✶	6	Press.@ Oper. [kg/cm^2 G]				
	✶	7	Temp.@ Oper. [°C]				
	✶	8	Press.@ Design[kg/cm^{2}G]				
	✶	9	Temp.@ Design[°C]				
		10	Operating Viscosity[cp]				
GAUGE	✶	11	C to C Length [mm]				
		12	Visible Length [mm]				
	✶	13	Connection Size				
	✶	14	Connection Arrangement				
	✶	15	Body Material				
		16	Cover Material				
		17	Gasket Material				
		18	Bolts / Nuts Material				
VALVE	✶	19	Type				
	✶	20	Body Material				
		21	Trim Material				
		22	Packing Material				
		23	Check Ball	Yes	Yes	Yes	Yes
		24	Re-Newable Seat				
	✶	25	Flange & Valve Con'n				
			Gauge Con'n: Size / Rating				
			Gauge Con'n: Union / Other				
	✶	26	Drain Con'n: Size / Rating				
			Drain Con'n: With /				
	✶	27	Vent Con'n: Size / Rating				
			Vent Con'n: With /				
OPTIONS	✶	28	Calibration Scale Plate				
	✶	29	Support Bracket				
	✶	30	Illuminator				
	✶	31	- Elect. Class				
	✶	32	- Elect. Supply				
	✶	33	Non-Frosting Plate				
	✶	34	Heating / Cooling Jacket				
		35	Shield [Mica]				
		36	Other				

REMARK : "✶" MARKED COLUMNS SHOULD BE FILLED UP BY CUSTOMER NECESSARILY [OR IF POSSIBLE].
NOTE :

samilind79@samilind.co.kr

samilind79@samilind.co.kr



HEAD OFFICE & FACTORY
405-848
#434-12, 44B-12L, NONHYUN - DONG,
NAMDONG-GU, INCHEON, KOREA
TEL : 82-2-2618-2000 ~ 4
82-32-819-9671 ~ 7
FAX : 82-32-819-9693 ~ 4
WEB PAGE : www.samilind.co.kr
E-MAIL : samilind79@samilind.co.kr

Without permission, Duplicate or Reproduction prohibited. First Published on 05 Sep. 2005

CHAPTER- 5

BOILER WATER GAUGES SERIES

REFLEX TYPE LEVEL GAUGES
TRANSPARENT TYPE LEVEL GAUGES
TWO-COLOR TYPE LEVEL GAUGES

IN THIS CHAPTER-5

Here is introduce the reflex and transparent type level gauges for boiler water service. You can also find our two-color type level gauges. All series of this chapter may be a little changed in order to improve a quality and on customer's special requirements.



TYPES AND MODELS FOR BOILER WATER & STEAM SERVICE

Below tabulated level gauge models are to use on the boiler drums and other steam services those are used under high pressure and high temperature. To cover a wide range of applications from low pressure and temperature to super high pressure under saturated temperature, SAM IL will offer various types of the level gauge suitable of the best on each service conditions of the various industrial requirements.

The general principles and features of SRG-1B and STG-1,2,3 & 4B described here are the same with that our SRG and STG series.

MODEL	TYPE	GLASS NO.	SERVICE CONDITIONS	
SRG-1B	REFLEX	NO. 5 ~ 9	500 psi[35 kg/cm^2]	AT 470 °F
STG-1B	TRANSPARENT	NO. 5 ~ 9	285 psi[20 kg/cm^2]	AT SAT. TEMP.
STG-2B		NO. 5 ~ 9	569 psi[40 kg/cm^2]	AT SAT. TEMP.
STG-3B		NO. 1 ~ 8	1422 psi[100 kg/cm^2]	AT SAT. TEMP.
STG-4B		NO. 1 ~ 7	3555 psi[250 kg/cm^2]	AT SAT. TEMP.
SGC-1B	TRANSPARENT TWO - COLOR	NO. 6 ~ 9	569 psi[40 kg/cm^2]	AT SAT. TEMP.
SGC-20B		NO. 5 ~ 8	853 psi[60 kg/cm^2]	AT SAT. TEMP.
SGCZ-20B		NO. 7 ~ 9	853 psi[60 kg/cm^2]	AT SAT. TEMP.
SGC-300B	MULTI - PORT TYPE TWO - COLOR	Port Glass	4978 psi[350 kg/cm^2]	AT SAT. TEMP.

DESCRIPTION

The above models are used for industrial boiler drums and **SRG-2,3 & 4** of SAM IL basic reflex types are not designed and manufactured for boiler water service because those are not suitable for high pressure under saturated temperature.

PRESSURE - TEMPERATURE CHARTS FOR REFLEX GLASS

INTRODUCTION :

Gauge Glasses in liquid level gauge on steam boilers are exposed to very high mechanical and chemical stresses. The interface between steam and water is continuously in motion like as water evaporates, condensate forms. In this an event, the glass is wear rapidly.
As the reflex glass is not protected with mica shield, an operating conditions is important in the boiler water service. with unprotected gauge glasses, steam pressure should not exceed 35 bar nor the pH-value 10. and the gauges used on steam services must be more frequently replaced than gauge glasses used with other media.



REFLEX GLASS

Reflex Glass Application Conditions

Saturated steam or hot water in direct contact with reflex sight glass is :

- **Maximum Permissible Pressure : 500 psi[35bar] at 243 °C [470 °F]**
  [If Pressure is not exceed 35 bar, the best and most economical solution].

■ The chart shown on the right is range of application with no technically significant glass attack.

■ Reflex Glasses can be used with all media except steam at service conditions up to 5800 psi[400bar] or temperature up to 750 °F [400 °C].

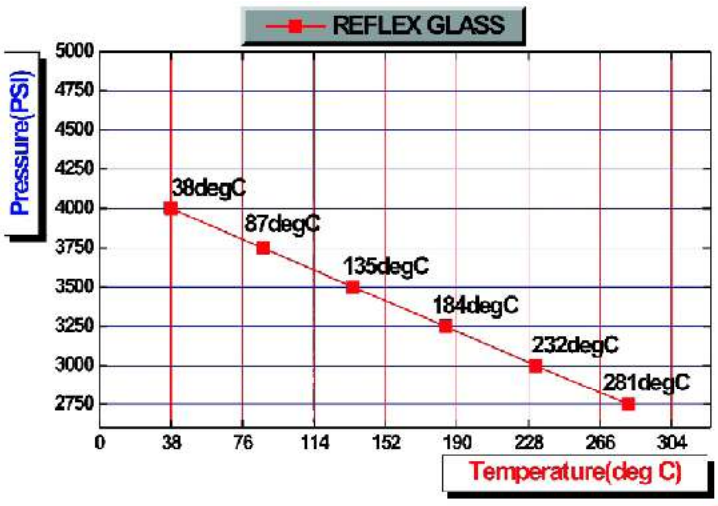

GENERAL DESCRIPTION

Reflex Type Gauge Glasses have a several groove on the glass surface that is in contact with the liquid for reflection. Liquid Level shows conspicuously dark hard color similar with black for liquid space and light white for empty or steam space.

For details, See **SAM IL** Basic Reflex Series.

MODEL IN THE SRG-1B



OPTIONS

- **Scale Plate**
  - units : Cm, Liter
- **Vent**
  - Needle Valve
  - Gate Valve
  - Globe Valve
  - Nipple & Cap
- **Drain**
  - Needle Valve
  - Gate Valve
  - Globe Valve
  - Nipple & Cap
- **Bracket**
  - Longer than 3000 mm of C to C
- **Gauge Valve**
  - Hand Wheel with Chain
  - Arm Lever

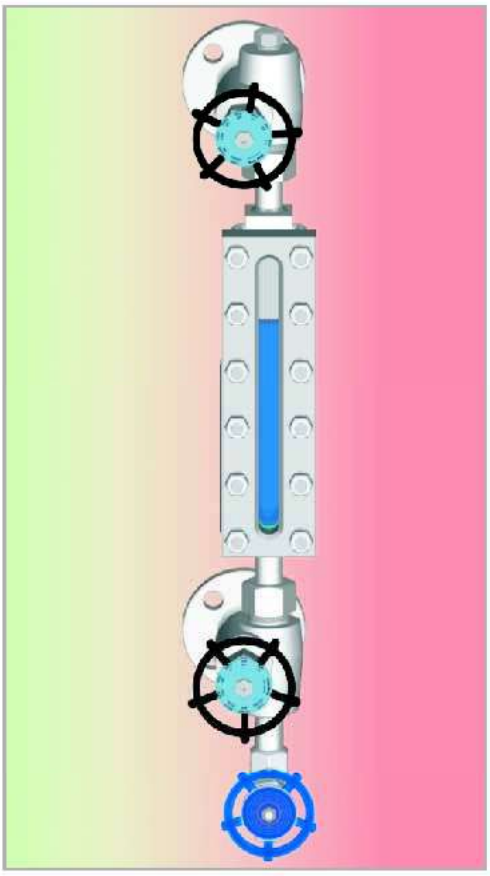

SPECIFICATIONS

- **MATERIAL** : Carbon Steel & Stainless Steel.
- **VISIBLE LENGTH** : 225 to 3510 mm.
- **MAX. NO. OF SECTION** : 8 Sections.
- **VESSEL CONNECTION** : 3/4" or 1" Flanged ANSI 150# ~300# or Socket Welds[S.W].
- **GAUGE BODY & GAUGE VALVE CON'N** : Not Rotatable & 360° Rotatable [turn to page G-9].
- **SHELL TEST PRESSURE** : 1.5 Times at the Max. Working Pressure.

Others, except the above specification are available on request by customer.

PRESSURE - TEMPERATURE CHARTS FOR TRANSPARENT GLASS

INTRODUCTION :

Gauge Glasses in liquid level gauges on steam boilers are exposed to very high mechanical and chemical stresses. The interface between steam and water is continuously in motion like as water evaporates, condensate forms. in this an event, the glass is wear rapidly.
For the above problem, Transparent Glasses could be protected with mica shield and if the medium is dirty, viscous on aggressive, flat transparent glasses guarantee better indication since the glass surface can be protected by mica shield against serious attack from media.

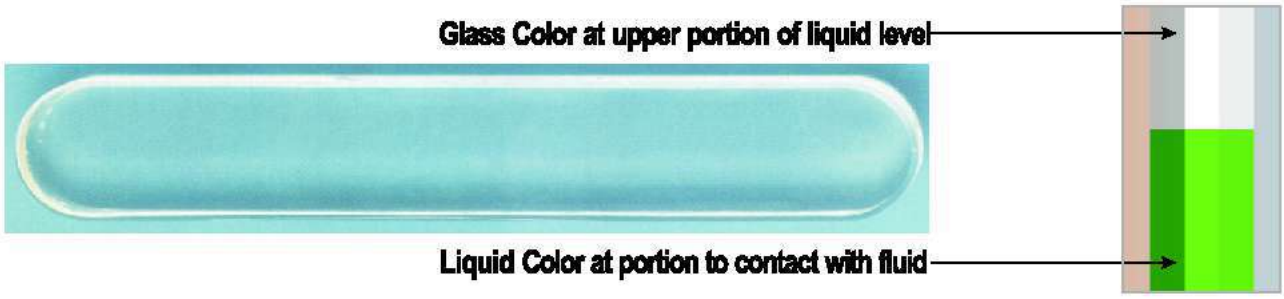

TRANSPARENT GLASS

Transparent Glass Application Conditions

- Saturated steam or hot water in direct contact with transparent sight glass is :

  - Maximum Permissible Pressure : 500 psi[35bar] at 243 °C [470 °F]

- Saturated steam or hot water in contact with transparent sight glass protected with Mica is :

  - Maximum Permissible Pressure : 1500 psi[103bar] at 320°C [608°F]

- The chart shown on the right is range of application with no technically significant glass attack.
- Transparent Glasses can be used with all media except steam at service conditions up to 4930 psi or temperature up to 400°C.

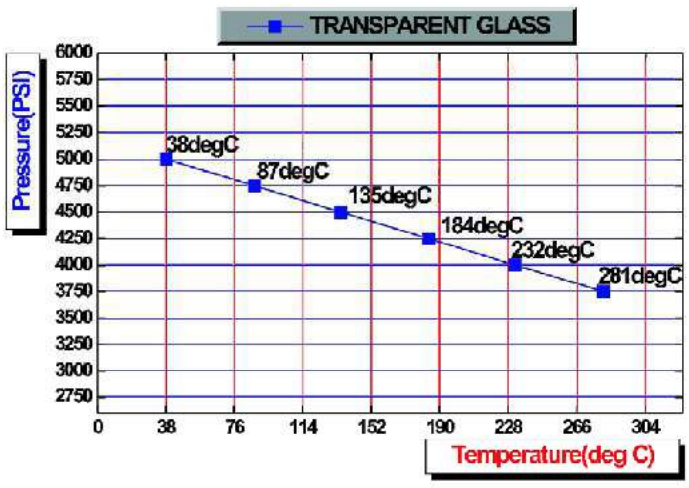

SAM IL TRANSPARENT GAUGE FOR BOILER SERVICES STG-B

GENERAL DESCRIPTION

These Types are the most commonly used for high pressure and temperature applications to a wide various of boiler services in the power plants, industrial boilers, steam generators, etc. Transparent Types are classified into four[4] models according to operating conditions. especially, our models, **STG-3B & 4B** capable of withstanding the pressure up to 1422 ~ 3555 psi and for protecting the thermal expansion in the event of over 250 degC or above, There is connected between gauge body and gauge valve with bended loop type[U-Formed].

For Details, See SAM IL Basic Transparent Series.

MODEL IN THE STG-B SERIES

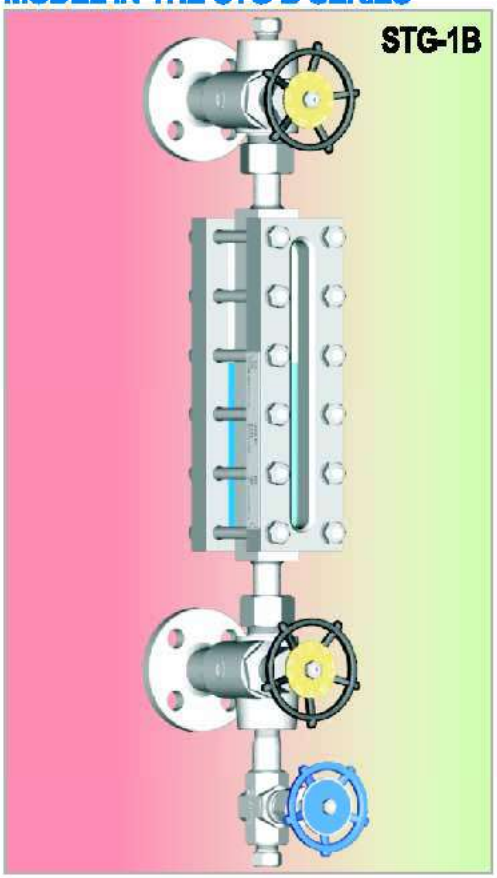

OPTIONS

- **Scale Plate**
  - units : Cm, Liter
- **Vent**
  - Needle Valve
  - Gate Valve
  - Globe Valve
  - Nipple & Cap
- **Drain**
  - Needle Valve
  - Gate Valve
  - Globe Valve
  - Nipple & Cap
- **Bracket**
  - Longer than 2000 mm of C to C
- **Gauge Valve**
  - Hand Wheel with Chain
  - Arm Lever

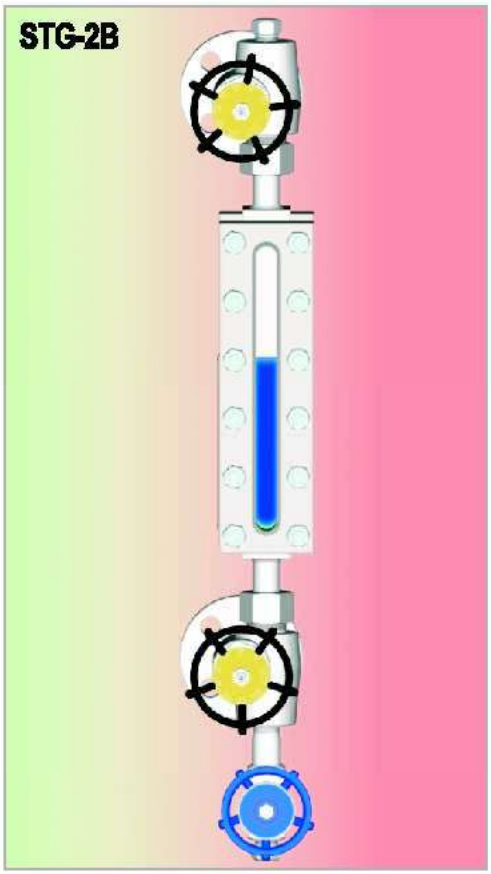

SPECIFICATIONS

- **MATERIAL** : Carbon Steel & Stainless Steel
- **VISIBLE LENGTH** : 225 to 3510 mm.
- **MAX. NO. OF SECTION** : 8 Sections.
- **VESSEL CONNECTION** : 3/4" or 1" Flanged ANSI 150# ~ 600# or Socket Welds[S.W].
- **GAUGE BODY & GAUGE VALVE CON'N** : Not Rotatable & 360° Rotatable [turn to page G-9].
- **SHELL TEST PRESSURE** : 1.5 Times at the Max. Working Pressure.

Others, except the above specification are available on request by customer.

STG-B SAM IL TRANSPARENT GAUGE FOR BOILER SERVICE

For General information of SAM IL's conventional transparent level gauge, See transparent series and this type is protected the glass from erosion in steam service with mica shield where the gauge is used for such high pressure and temperature as to cause the erosion.

MODEL IN THE STG-B SERIES

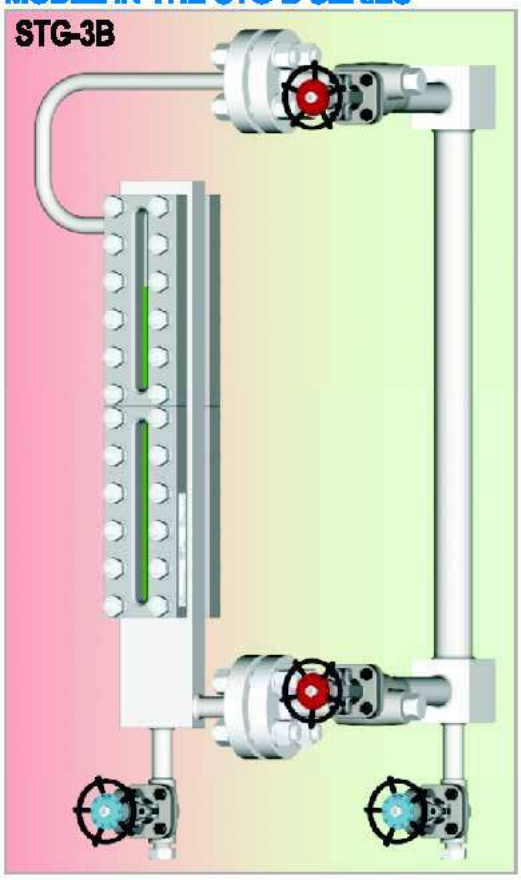

OPTIONS

- **Scale Plate**
  - units : Cm, Liter
- **Vent**
  - Gate Valve
  - Globe Valve
  - Nipple & Cap
- **Drain**
  - Gate Valve
  - Globe Valve
  - Nipple & Cap
- **Gauge Valve**
  - Hand Wheel with Chain
  - Arm Lever

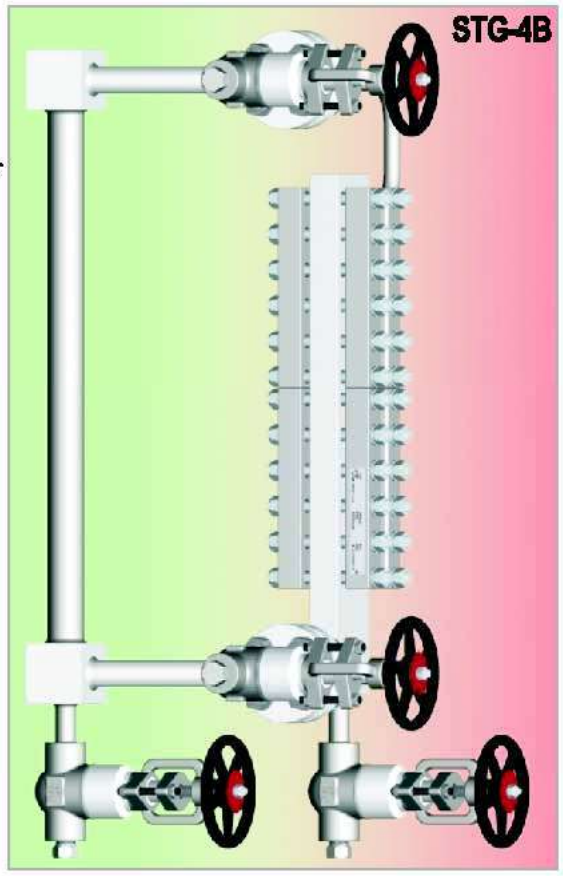

SPECIFICATIONS

- **MATERIAL** : Carbon Steel & Stainless Steel, A182-F11, F22, F5, F9, F91, etc.
- **VISIBLE LENGTH** : 225 to 3510 mm.
- **MAX. NO. OF SECTION** : 8 Sections.
- **VESSEL CONNECTION** : Socket Welds or Flanged[on request].
- **GAUGE BODY & GAUGE VALVE CON'N** : Not Rotatable[turn to page G-9].
- **SHELL TEST PRESSURE** : 1.5 Times at the Max. Working Pressure.

Others, except the above specification are available on request by customer.

SECTIONAL VIEW

Nozzle Orientation - **A** is **SAM IL** Standard and Nozzle - **B** is only available on request by Customer.

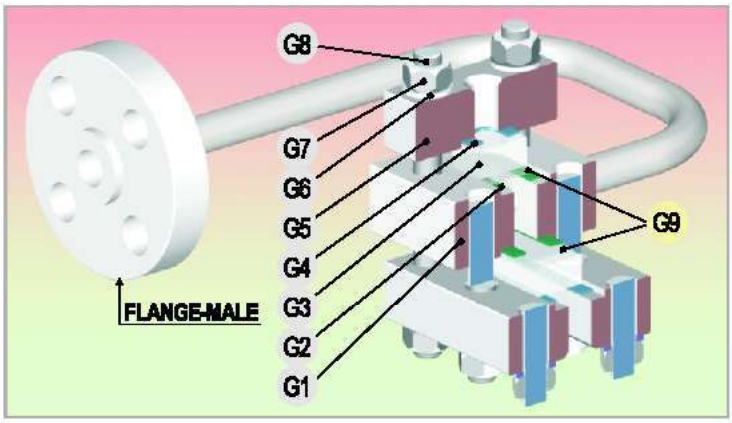

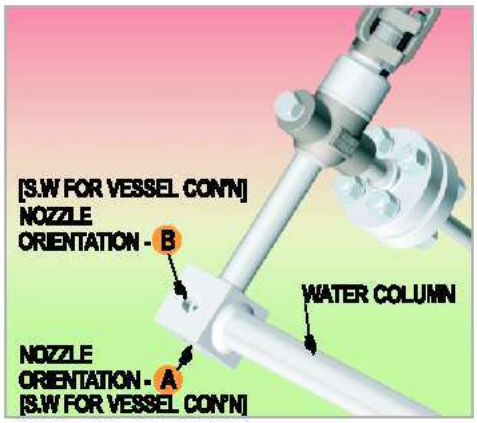

NO.	PARTS	MATERIAL	NO.	PART	MATERIAL
G1	Gauge Body	C.S, Stainless Steel	G5	Gauge Cover	Carbon Steel
G2	Sealing Gasket	Graphite	G6	Washer	SWRH-62B
G3	Transparent Glass	Borosilicate	G7	Nuts	A194 Gr.2H
G4	Cushion Gasket	Non-Asbestos	G8	Stud-Bolts	A193 Gr.B7
			G9	Shield	Mica

DIMENSIONAL VIEW

MODEL	INSTALLATION DIRECTION		DIRECTION OF GAUGE FACING	DIMENSIONS		
	RIGHT-HAND	LEFT-HAND		GLASS NO.	C to C	V.L
STG-3B	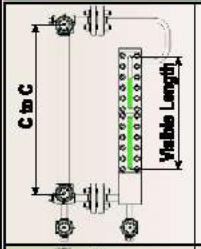	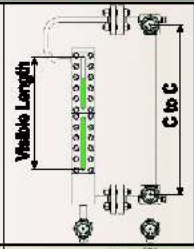	FRONT ONLY	5	340	195
				6	370	225
				7	400	255
				8	440	295
STG-4B	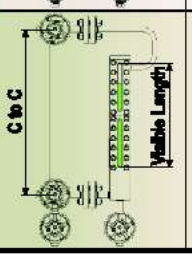	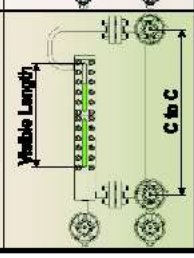	FRONT ONLY	4	320	165
				5	350	195
				6	380	225
				7	410	255

※Others, except the above materials of part are available on request by customer.

INTRODUCTION :

Two-Color Level Gauge is apply the principle of a difference between refractive indices of light at liquid such as water in the boiler and that of steam. In this former reason, we can observe obviously the level through the two-color level gauge series because of display the level as reliable chromatic indication in which is **GREEN** Color for water portion and **RED** Color for steam portion. With distinguishing a light into red and green color through the colored filter and its distinguished colors enter into visible window of level gauge after traveling angle is changed a little by the wedge shaped body. in the above principle, when the gauge is filled with water, The red light beam is disappear after deflected side-wards and absorbed and is filled with steam, it pass through the steam space. Therefore, only the red light beam appears in the steam space and the green light beam is vice versa against the above.
Two-Color Gauge Series is designed and manufactured based on the above principles.

HOW IT COMPRISED

The Two-Color Illuminator is mounted the illuminator box equipped with a special filter glasses [Red and Green Colored], lamps and a frost glass for fixing color glasses at the rear of observing window of the body in the SGC-B Gauge Series. The body of SGC-B Series has wedge-shaped as shown in the sectional view on the pages after next and next.

COMPRISAL DIAGRAM

STEAM VIEW

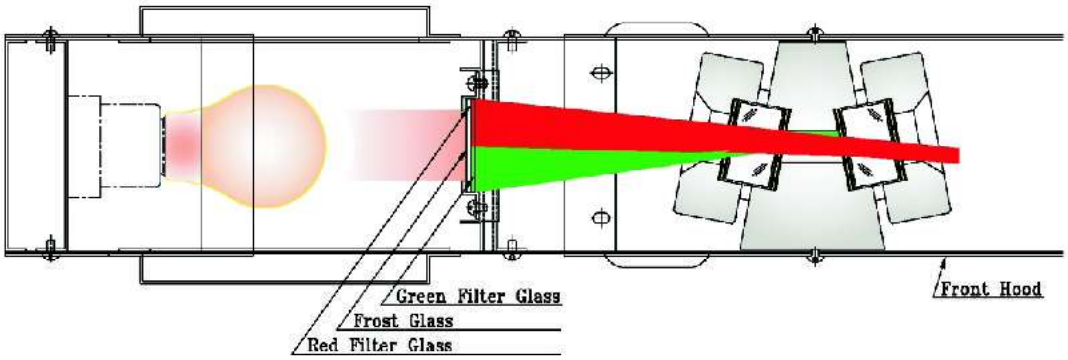

LIQUID VIEW

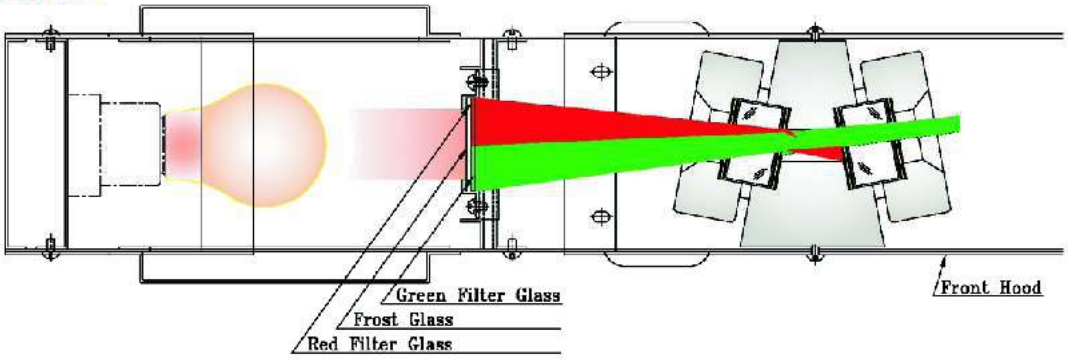

OBSERVATION BY REMOTE SYSTEM

With installation the TV Camera, you can observe the liquid level in the central control place apart long distance from the SGC-B Type level gauge. Liquid level will be transmitted into TV as a **GREEN** Color for liquid space and a **RED** Color for steam space.

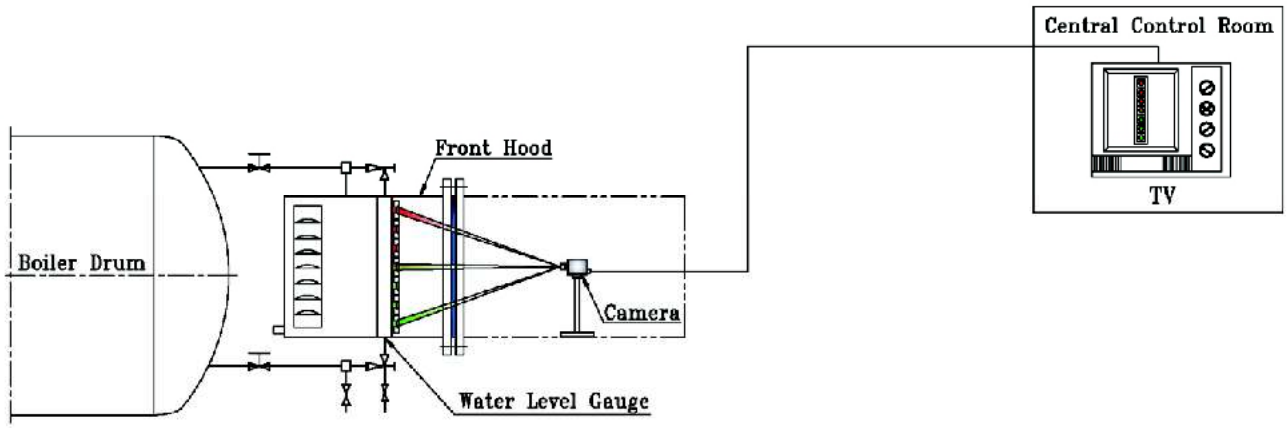

OBSERVATION BY PERISCOPE

The Periscope is comprised of several hoods with reflex mirror and observation is performed at the most convenient place to an observer.



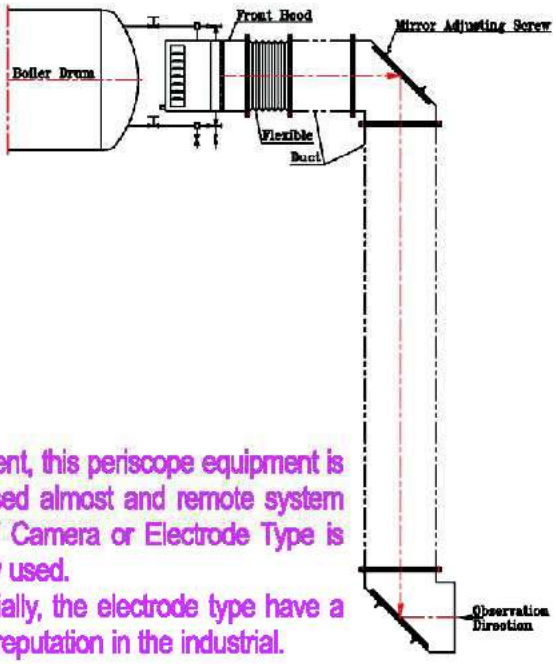

In recent, this periscope equipment is not used almost and remote system by TV Camera or Electrode Type is mostly used.
especially, the electrode type have a great reputation in the industrial.

SGC-B SAM IL TRANSPARENT TYPE TWO-COLOR FOR BOILER

GENERAL DESCRIPTION

This Types are of the most excellent construction as function of the transparent type two-color gauges, especially has wide-spread out a great reputation for the installed ones on the boilers at the independent power generation plant or industrial.

MODEL IN THE SGC-B SERIES

SGC-1B

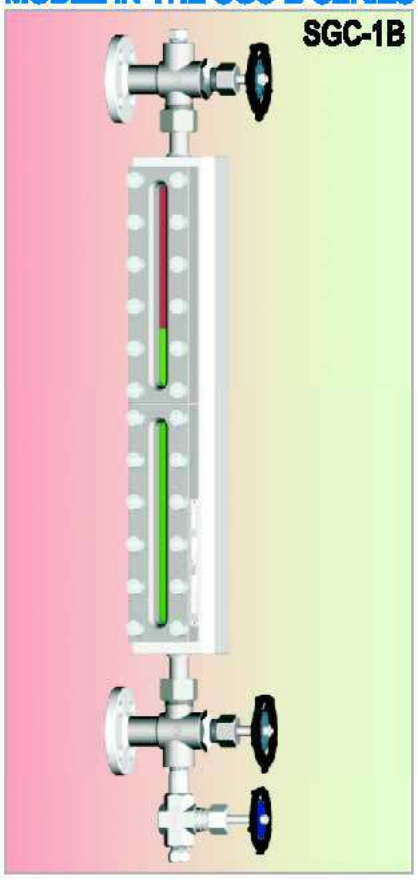

OPTIONS

- **Scale Plate**
  - units : Cm, Liter
- **Vent**
  - Gate Valve
  - Globe Valve
  - Nipple & Cap
  - Needle Valve
- **Drain**
  - Gate Valve
  - Globe Valve
  - Nipple & Cap
  - Needle Valve
- **Bracket[SGC-1B]**
  - Longer than 3000 mm of C to C
- **Gauge Valve**
  - Hand Wheel with Chain
  - Arm Lever

SGC-20B

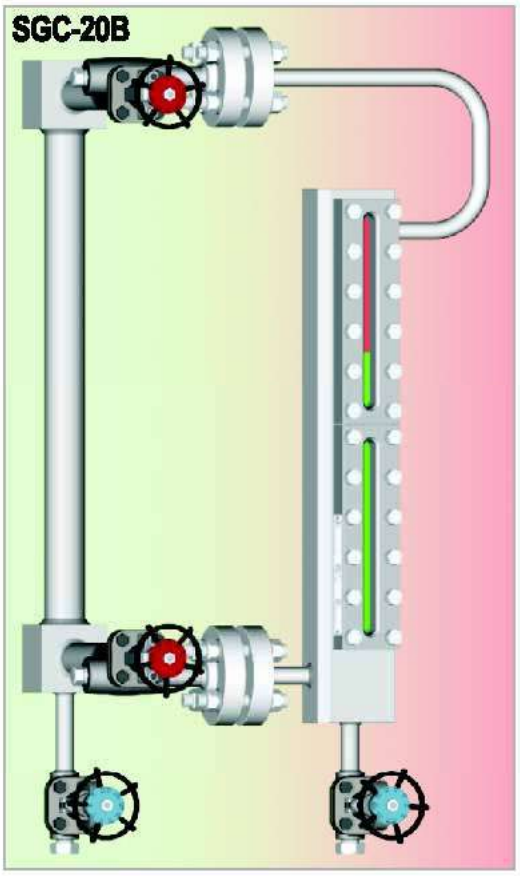

SPECIFICATIONS

- **MATERIAL** : Carbon Steel & Stainless Steel, etc.
- **VISIBLE LENGTH** : 225 to 3510 mm.
- **MAX. NO. OF SECTION** : 8 Sections for SGC-20B and 9 Sections for SGC-1B.
- **VESSEL CONNECTION** : 3/4" or 1" Flanged ANSI 150# ~ 900# or Socket Welds[S.W].
- **GAUGE BODY & GAUGE VALVE CON'N** : Not Rotatable [SGC-20B] & 360° Rotatable [turn to page G-9].
- **SHELL TEST PRESSURE** : 1.5 Times at the Max. Working Pressure.

Others, except the above specification are available on request by customer.

SECTIONAL VIEW

Nozzle Orientation - **A** is **SAM IL** Standard and Nozzle - **B** is only available on request by Customer.

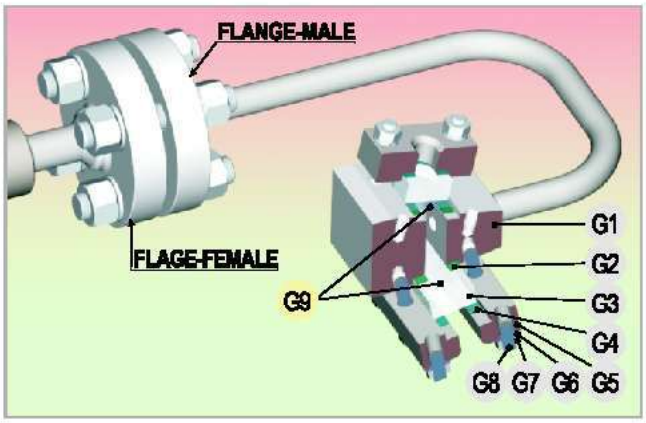

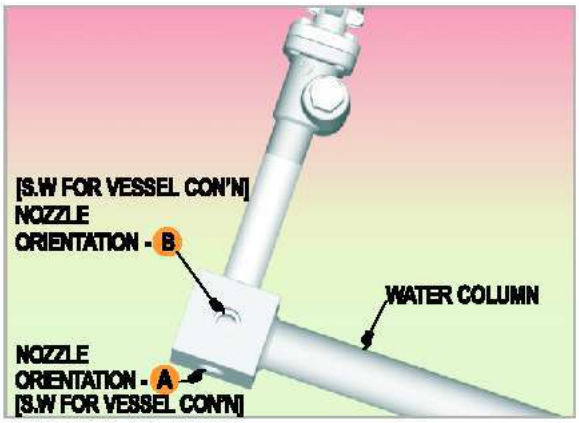

NO.	PARTS	MATERIAL	NO.	PART	MATERIAL
G1	Gauge Body	C.S, Stainless Steel	G5	Gauge Cover	Carbon Steel
G2	Sealing Gasket	Graphite	G6	Washer	SWRH-62B
G3	Transparent Glass	Borosilicate	G7	Nuts	A194 Gr.2H
G4	Cushion Gasket	Non-Asbestos	G8	Stud-Bolts	A193 Gr.B7
			G9	Shield	Mica

DIMENSIONAL VIEW

MODEL	INSTALLATION DIRECTION		DIRECTION OF GAUGE FACING	DIMENSIONS		
	RIGHT-HAND	LEFT-HAND		GLASS NO.	C to C	V.L
SGC-1B	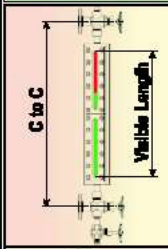	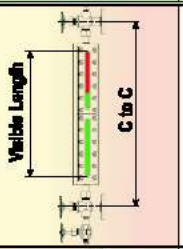	NOT ROTATABLE & 360° ROTATABLE	6	500	225
				7	530	255
				8	570	295
				9	590	315
SGC-20B	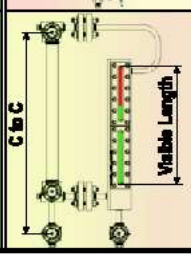	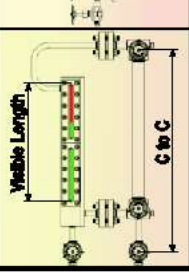	FRONT ONLY	5	350	195
				6	380	225
				7	410	255
				8	450	295

Others, except the above materials of part are available on request by customer.

SGC-B SAM IL TRANSPARENT TYPE TWO-COLOR FOR BOILER

GENERAL DESCRIPTION

For General Information of **SAM IL**'s conventional transparent level gauges, See the transparent series and this type protects the glass from erosion in steam service with mica shield where the gauge is used under such high temperature and pressure as to cause the erosion.

MODEL IN THE SGC-B SERIES

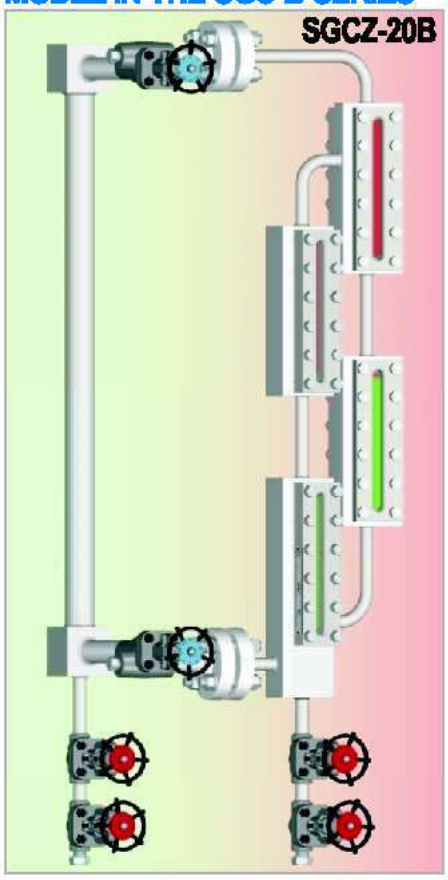

OPTIONS

■ **Scale Plate**
- units : Cm, Liter

■ **Drain**
- Gate Valve
- Globe Valve
- Nipple & Cap
- Double Drain

■ **Gauge Valve**
- Hand Wheel with Chain
- Arm Lever

ILLUMINATOR FOR SGC-B SERIES



▣ CONSTRUCTION OF LAMP

- SGC-1B, 20B & SGCZ-20B : 2 Lamps per Gauge Glass.
- SGC-300B : 1 Lamp per Port Glass.

SPECIFICATIONS

■ **MATERIAL** : Carbon Steel & Stainless Steel, etc.
■ **VISIBLE LENGTH** : 225 to 3510 mm.
■ **MAX. NO. OF SECTION** : 8 Sections.
■ **VESSEL CONNECTION** : 3/4" or 1" Flanged ANSI 150# ~ 900# or Socket Welds[S.W].
■ **GAUGE BODY & GAUGE VALVE CON'N** : Not Rotatab[turn to page G-9].
■ **SHELL TEST PRESSURE** : 1.5 Times at the Max. Working Pressure.

Others, except the above specification are available on request by customer.

SAM IL TRANSPARENT TYPE TWO-COLOR FOR BOILER SGC-B

SECTIONAL VIEW

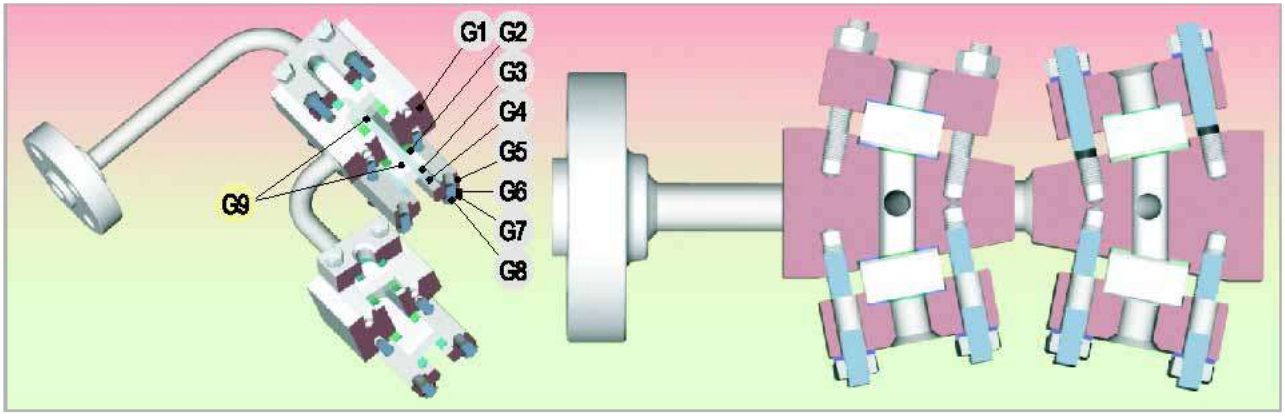

NO.	PARTS	MATERIAL	NO.	PART	MATERIAL
G1	Gauge Body	C.S, Stainless Steel	G5	Gauge Cover	Carbon Steel
G2	Sealing Gasket	Graphite	G6	Washer	SWRH-62B
G3	Transparent Glass	Borosilicate	G7	Nuts	A194 Gr.2H
G4	Cushion Gasket	Non-Asbestos	G8	Stud-Bolts	A193 Gr.B7
			G9	Shield	Mica

☐ Construction of this level gauge for boiler is in full accordance with ASME Boiler & Pressure Vessel Code.

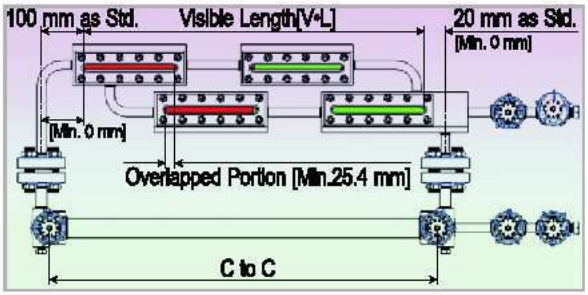

DIMENSIONAL VIEW

NO. OF GAUGE SECTIONS	GLASS NO. -7		GLASS NO. -8		GLASS NO. -9	
	C TO C [mm]	V - L [mm]	C TO C [mm]	V - L [mm]	C TO C [mm]	V - L [mm]
3 GAUGES	830	710	950	830	1010	890
4 GAUGES	1060	940	1220	1100	1300	1180
5 GAUGES	1290	1170	1490	1370	1590	1470
6 GAUGES	1520	1400	1760	1640	1880	1760
7 GAUGES	1750	1630	2030	1910	2170	2050
8 GAUGES	1980	1860	2300	2180	2460	2340
9 GAUGES	2210	2090	2570	2450	2750	2630
10 GAUGES	2410	2290	2840	2720	3040	2920

Visible + 120 [=Minimum] = C to C, as standard.

Others, except the above materials of part are available on request by customer.

GENERAL DESCRIPTION

This Multi-Port type Two-Color Level Gauges are designed and manufactured to use under its services of higher pressure and temperature than conventional Reflex and Transparent type gauges. The impacts or shocks from internal pressure and thermal [=heat] are distributed uniformly to each ports. Thereby, this type is usually used on the steam boiler under the service of high pressure and temperature because of avoiding or minimizing the glass breakage / damage and increasing the structural durability.

SGC-300B

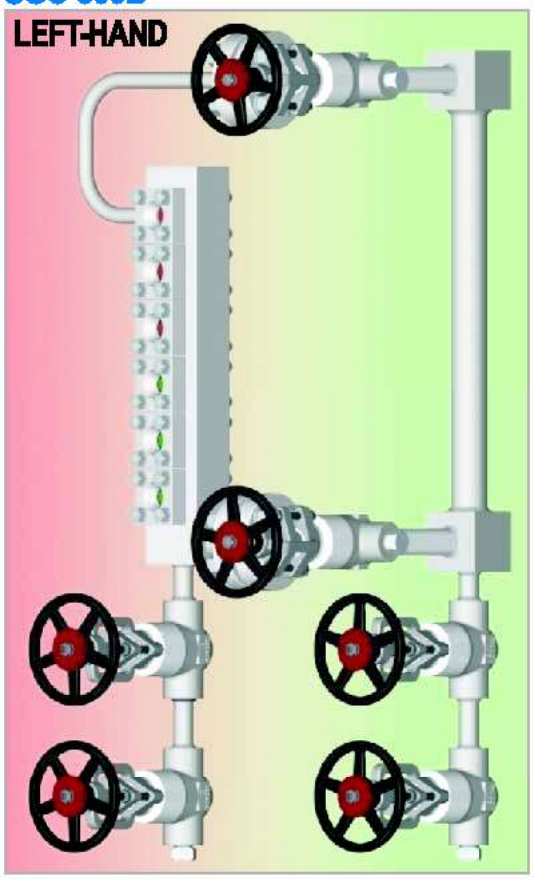

OPTIONS

■ **Scale Plate**
- units : Cm, Liter

■ **Drain**
- Gate Valve
- Globe Valve
- Nipple & Cap
- Double Drain

■ **Gauge Valve**
- Hand Wheel with Chain
- Arm Lever

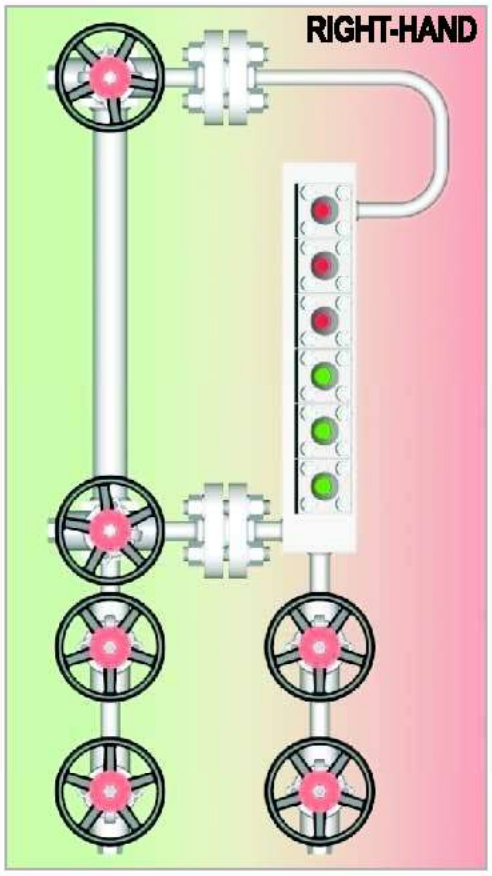

SPECIFICATIONS

- ■ **MATERIAL** : Carbon Steel & Stainless Steel, A182-F11, F22, F5, F9, F91, etc.
- ■ **VISIBLE LENGTH** : Max. 1597 mm.
- ■ **MAX. NO. OF SECTION** : 22 Ports.
- ■ **VESSEL CONNECTION** : 3/4" or 1" Flanged ANSI 900# ~ 2500# or Socket Welds[S.W].
- ■ **GAUGE BODY & GAUGE VALVE CON'N** : Not Rotatab[turn to page G-9].
- ■ **SHELL TEST PRESSURE** : 1.5 Times at the Max. Working Pressure.

Others, except the above specification are available on request by customer.

SAM IL MULTI-PORTT TYPE TWO-COLOR FOR BOILER SGC-B

SECTIONAL VIEW

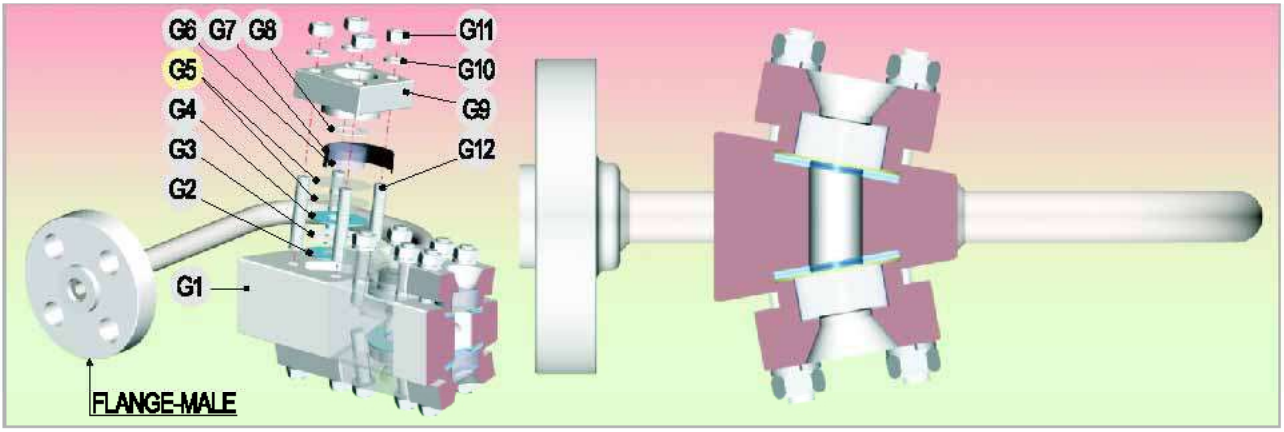

NO.	PARTS	MATERIAL	NO.	PART	MATERIAL
G1	Gauge Body	A105, Stainless Steel	G7	Packing Strip	Non-Asbestos
G2	1st Sealing Gasket	Graphite	G8	Gasket	Aluminum
G3	Metal Sheet	304SS	G9	Gauge Cover	A105
G4	2nd Sealing Gasket	Graphite	G10	Washer	SWRH-62B
G5	Shield	Ruby Mica	G11	Nuts	A194 Gr.2H
G6	Port Glass	Alumina-Silicate	G12	Stud-Bolts	A193 Gr.B7

DIMENSIONAL VIEW

MODEL	INSTALLATION DIRECTION		DIRECTION OF GAUGE FACING	DIMENSIONS		
	RIGHT-HAND	LEFT-HAND		NO. OF PORTS	C to C	V.L
SGC-300B	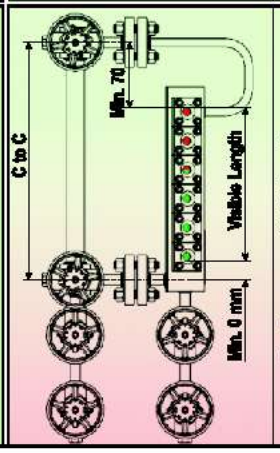	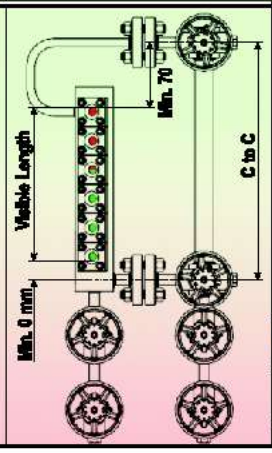	FRONT ONLY	6	467	397
				7	542	472
				8	617	547
				9	692	622
				10	767	697

V-L is possible to manufacture as min. 70 mm for top side and 0 mm for bottom side base on C to C.

Others, C to C & V-L are available on required spec.

75 x No. of Ports - 53 = Visible Length.

Others, except the above materials of part are available on request by customer.

Nozzle Orientation - **A** is **SAM IL** Standard and Nozzle - **B** is only available on request by Customer.

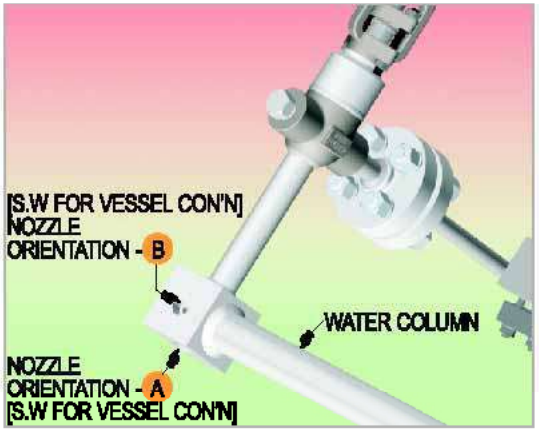

STELLITE as an option :
The stem and renewable seat with stellite reinforcement is hard and resistant to abrasion and corrosion. It prevents scorching and withstand high pressure and temperature.

INSTALLATION : In recent boiler installations, at least a set of this type gauge is used to a boiler which normally installs two sets of level observation system in order to prevent an occurrence of sudden and abnormal change of the water level.

EASY AND ECONOMICAL MAINTENANCE : Multi-Port Type Gauge have several ports for visible. It offers a feature of economical maintenance since replacement of the gauge glass can be carried out for a port only to replace independently.

EASY LEVEL READING : Multi-Port Type Gauge is easy to read the exact level of boiler drum far away at any frontal angle because of providing the wide visible window and an incandescent bulb beam.

NO.	PARTS
1	Water Column Block
2	Retainer
3	Pipe
4	Check Ball
5	Re-Newable Seat
6	Gauge Valve Body
7	Plug
8	Stem
9	Bonnet
10	Gland Packing
11	Gland Bolt
12	Gland Nut
13	Yoke
14	Gland
15	Gland Flange
16	Sleeve
17	Hand Wheel
18	Name Plate
19	Washer
20	Nut

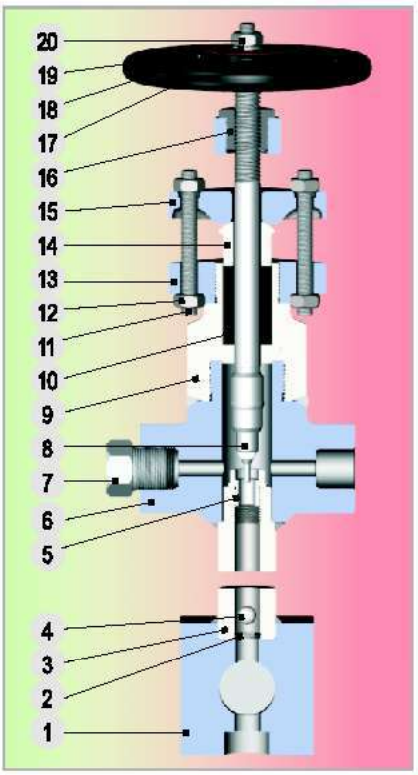

ENQUIRY- / ORDER FORM FOR PRODUCTS

TO : SAM IL INDUSTRY CO.,LTD.	FROM :
WEB PAGE : www.samilind.co.kr	WEB PAGE :
E - MAIL : samilind79@samilind.co.kr	E - MAIL :
TEL NO. : 82-2-2618-2000 ~4, 82-32-819-9671 ~ 7	TEL NO. :
FAX NO. : 82-32-819-9693 ~4	FAX NO. :

We are pleased to receive this enquiry- / order form for products from your company.

SPECIAL REQUIREMENTS :

OUTLINE DRAWING [IF NECESSARY] :

www.samilind.co.kr
samilind79@samilind.co.kr

DATA SHEET

SINCE 1979
SAM IL INDUSTRY CO.,LTD.

LEVEL GAUGE
[SRG-B, STG-B, SGC-B SERIES]

NO.	BY	DATE	REVISION

SHEET :	OF
SPEC. NO.	REV.
CONTRACT	DATA
REQ. P.O.	
BY / CHK'D / APPR.	

			Item No.	1	2	3	4
GENERAL	✱	2	Tag No.				
	✱	3	QTY				
		4	Model No.				
FLUID DATA	✱	5	Fluid Name				
	✱	6	Press.@ Oper. [kg/cm² G]				
	✱	7	Temp.@ Oper. [°C]				
	✱	8	Press.@ Design[kg/cm²G]				
	✱	9	Temp.@ Design[°C]				
		10	Operating Viscosity[cp]				
GAUGE	✱	11	C to C Length [mm]				
		12	Visible Length [mm]				
	✱	13	Connection Size				
	✱	14	Connection Arrangement				
	✱	15	Body Material				
		16	Cover Material				
		17	Gasket Material				
		18	Bolts / Nuts Material				
VALVE	✱	19	Type				
	✱	20	Body Material				
		21	Trim Material				
		22	Packing Material				
		23	Check Ball	Yes	Yes	Yes	Yes
		24	Re-Newable Seat				
			Flange & Valve Con'n				
	✱	25	Gauge Con'n: Size / Rating / Union / Other				
	✱	26	Drain Con'n: Size / Rating / With /				
	✱	27	Vent Con'n: Size / Rating / With /				
OPTIONS	✱	28	Calibration Scale Plate				
	✱	29	Support Bracket				
	✱	30	Illuminator				
	✱	31	- Elect. Class				
	✱	32	- Elect. Supply				
	✱	33	Water Column	Yes / No	Yes / No	Yes / No	Yes / No
		34	Shield [Mica]				
		35	Others				

REMARK : "✱" MARKED COLUMNS SHOULD BE FILLED UP BY CUSTOMER NECESSARILY [OR IF POSSIBLE].
NOTE :

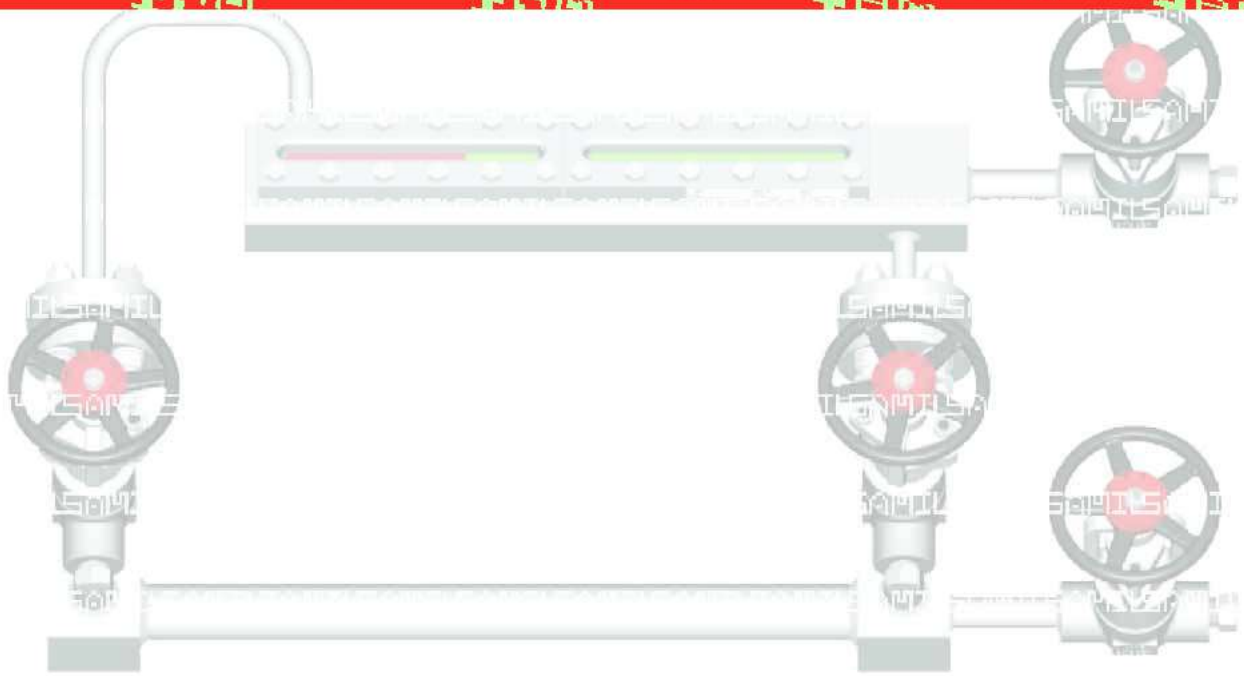



HEAD OFFICE & FACTORY

405-848
#434-12, 44B-12L, NONHYUN - DONG,
NAMDONG-GU, INCHEON, KOREA
TEL : 82-2-2618-2000 ~ 4
82-32-819-9671 ~ 7
FAX : 82-32-819-9693 ~ 4
WEB PAGE : www.samilind.co.kr
E-MAIL : samilind79@samilind.co.kr

SAM IL INDUSTRY CO.,LTD.

Without permission, Duplicate or Reproduction prohibited. First Published on 05 Sep. 2005

CHAPTER– 6

MAGNETIC LEVEL GAUGE SERIES

MAGNETIC FLOAT TYPE LEVEL GAUGES

IN THIS CHAPTER-6

We introduce all types of magnetic float type level gauges as standard model and more details for the float dimensions will be indicated in the submittal drawings because those are various according to specific gravity of the operating conditions.

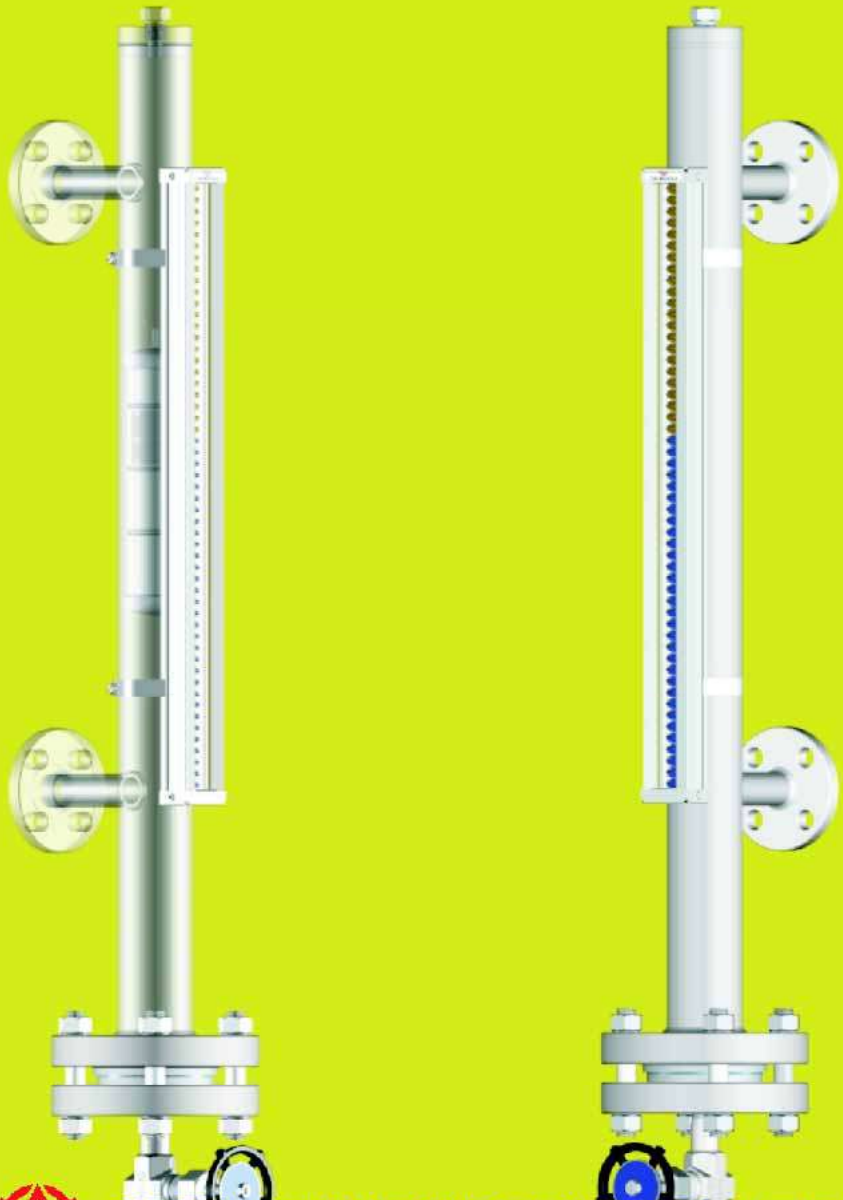

OPERATING PRINCIPLE

A float Assembly equipped with a magnetic rises and falls in the interior of its chamber with the liquid level of the tank. The indicator installed to the exterior of the float chamber is a series of bi-colored flappers in each a magnet. As the float assembly moves inside the chamber, magnetic forces cause the bi-colored flappers to flip to the opposite side and liquid level is visualized by means of two-color of the flappers.

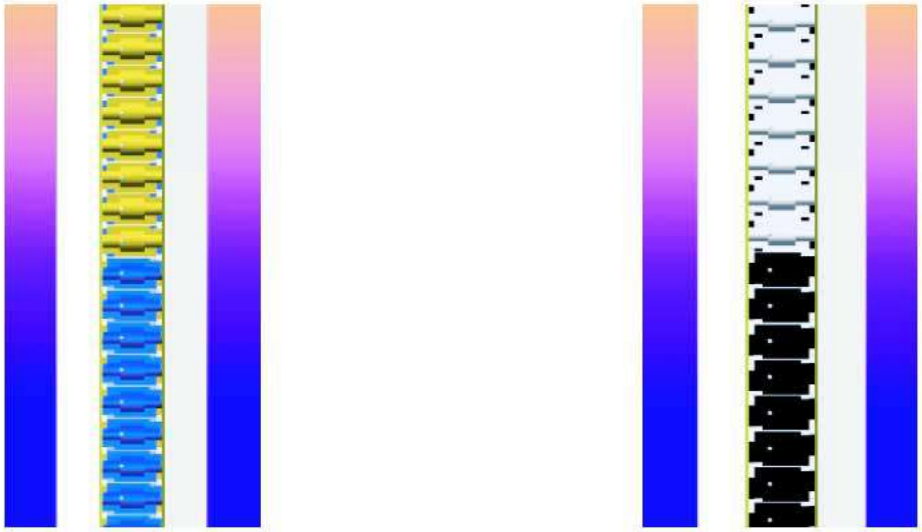

Whenever the float rises orf falls with the liquid level, each flappers rotates 180° corresponding to the magnet forces and indicates its face of a contrasting color.

Flapper Color	Max. Working Temperature
Gold / Blue	249 deg C
Silver / Black	250 ~ 400 deg C

ADVANTAGES

- There is no limits to inspect any height of the level and invisible part is very small.
- It can measure the boundary surface of two kinds liquid which have different specific gravity [Suitable for measuring interface].
- Local and Remote level indicators are available [Turn to page **M-7**].
- Measuring Scale Plate on request any units is available as an option.
- It Can be used for the underground tank [**Model : SMF-50AU**].
- Top Safety, as no used glass → liquid is contained within the float chamber.

HOW IT DOES MOTION

The magnetic float gauge is designed so that the fluid being measured is enclosed within a sealed chamber. A float fitted with a permanent magnet moves freely inside the chamber and activates the flappers of the aluminum indicator mounted on the outside of the chamber.

As the magnetic float passes each flapper with rising or falling with liquid level, The flapper rotates 180° to show the other color.

Rotating flappers are installed in the Non-Magnetic Case at intervals of 10 mm or so. It doesn't fail to indicate even at the sudden change of liquid level. The liquid phases and gaseous are indicated by blue color and gold color respectively.

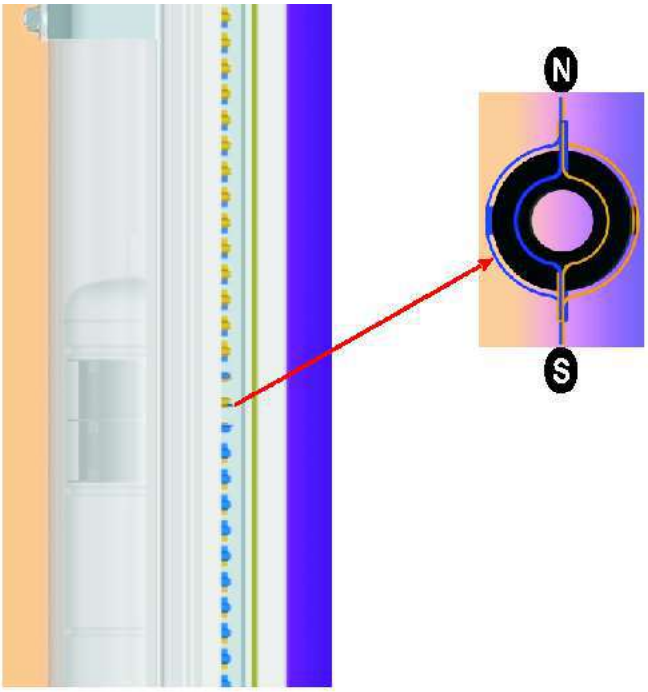

SECTIONAL VIEW



Magnetic Type Level Indicator is an instrument for indicating the fluid level. It has a magnetic float inside of the **Non-Magnetic** Chamber and an indicator outside of it.

The indicator indicates fluid level by means of magnetic force of the magnet installed inside the float. The Indicator is completely separated from the chamber.

The level of liquid and gaseous phases can be distinguished clearly by the Bi-Color.

STANDARD TYPE

SMF-50A

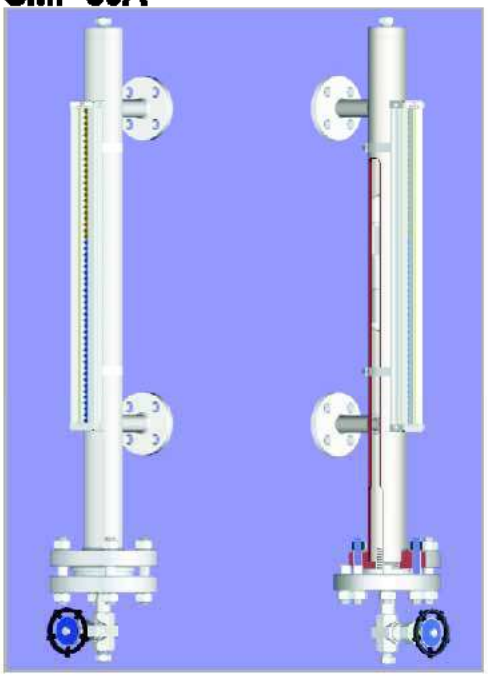

SPECIFICATIONS

- Column Size : DN50.
- Schedule : SCH 10S, 20S, 40S, etc.
- Flange Rating : 150LB ~ 900LB.
  PVC : 150LB ONLY.
- Material : 304SS, 316SS, 316LSS
  Titanium, PVC, Monel, etc.
- Max. Working Pres. : 900 PSI.
- Max. Working Temp. : 300 deg C.
- Specific Gravity : Min. 0.34.

SMF-50A is
Used for observing almost all fluid which is poisonous gas or liquid tank and boiler drum with low & middle pressure up to 900lb and it's have weight with outstanding safety from its damage or breakage and to be of low price.

SPECIFICATIONS

- Column Size : DN65.
- Schedule : SCH 40S, 80S, etc.
- Flange Rating : 900LB ~ 2500LB.
- Material : 304SS, 316SS, 316LSS
  Titanium, Monel, etc.
- Max. Working Pres. : 2500 PSI.
- Max. Working Temp. : 350 deg C.
- Specific Gravity : Min. 0.622.

SMF-65A is
Used for more higher pressure up to 2500lb than **SMF-50A** of standard type.

STANDARD TYPE

SMF-65A

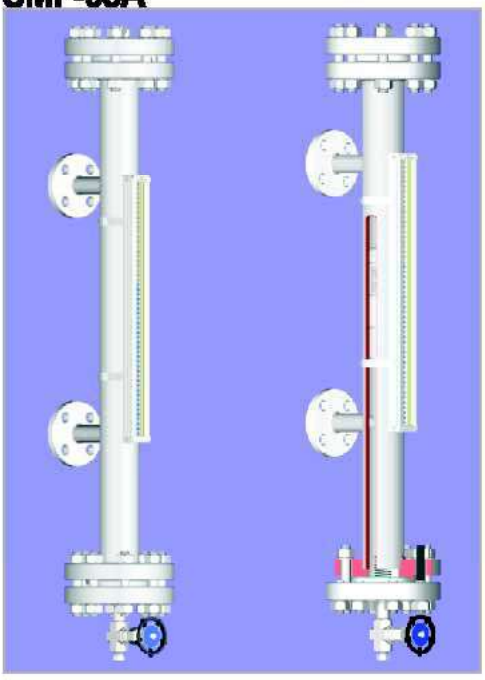

OPTIONS

■ Scale Plate -Unit : centi-meter[Cm] as standard and others are also available an request.	■ Drain - Gate Valve. - Globe Valve. - Nipple & Cap.

Others, except the above specification are available on request by customer.

NON-FROSTING TYPE

SMF-50AN

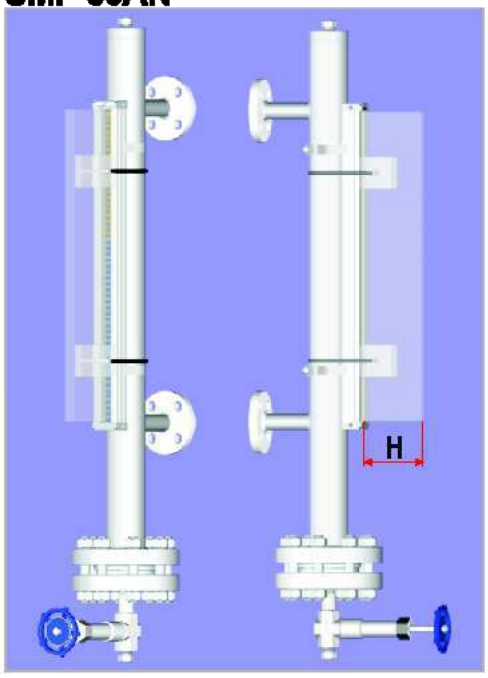

SPECIFICATIONS

- Column Size : DN50.
- Schedule : SCH 10S, 20S, 40S, etc.
- Flange Rating : 150LB ~ 900LB.
- Material : 304SS, 316SS, 316LSS Titanium, Monel, etc.
- Max. Working Pres. : 900 PSI.
- Max. Working Temp. : -200 deg C.
- Specific Gravity : Min. 0.34.

NO.	H	Temp(°C)
F1	75	0 to -20
F2	100	-21 to -45
F3	150	-46 to -100
F4	200	-101 to -200

SMF-50AN for low temperature is

Used for protecting the frost at extremely low temperature applications, thereby you can obviously visible the flapper color to indicate it fluid level.

SPECIFICATIONS

- Column Size : DN50 - Jacket Pipe : DN65.
- Schedule : SCH 20S, 40S, etc.
- Flange Rating : 150LB ~ 600LB.
- Material : 304SS, 316SS, 316LSS Titanium, Monel, etc. Jacket Material : 304SS.
- Max. Working Pres. : 600 PSI.
- Max. Working Temp. : 300 deg C.
- Specific Gravity : Min. 0.34.

SMF-50AJ for Heating and Cooling is

Used for observing the level of highly congealable or ebullient liquids. The principle is in flow a steam for congealable liquids and a cold water for ebullient liquids through the inside of the jacket pipe.

OPTIONS

■ Scale Plate -Unit : centi-meter[Cm] as standard and others are also available an request.	■ Drain - Gate Valve. - Globe Valve. - Nipple & Cap.

JACKET TYPE

SMF-50AJ

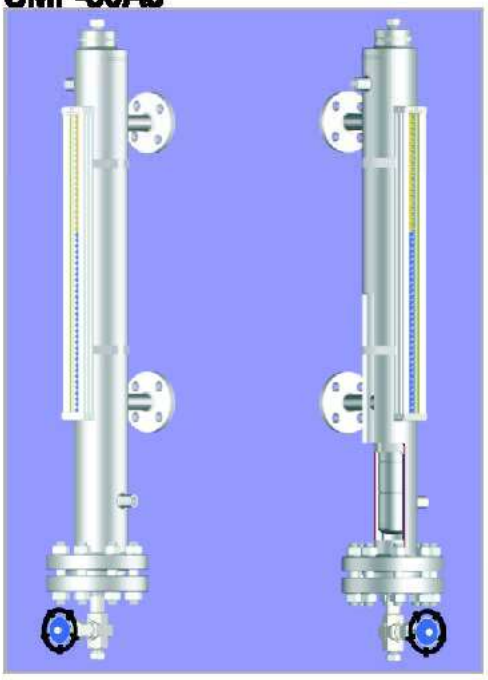

Others, except the above specification are available on request by customer.

LINED TYPE

SMF-50ALD

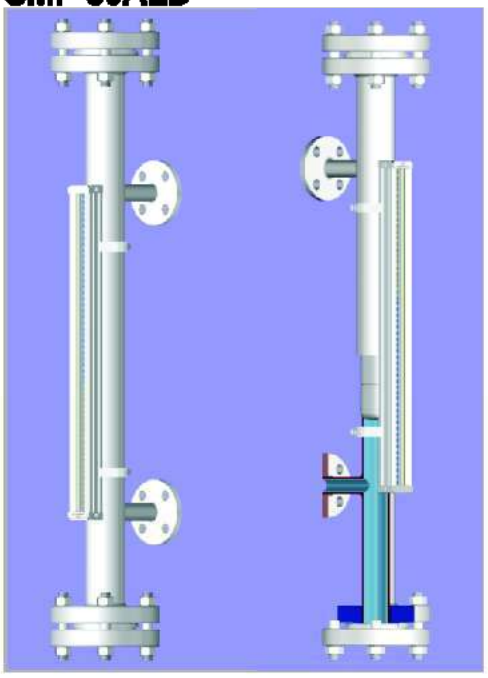

SPECIFICATIONS

- Column Size : DN50.
- Schedule : SCH 5S, 10S, etc.
- Flange Rating : 150LB ~ 300LB.
- Material : 304SS, 316SS, 316LSS, Titanium, Monel, etc.
- Max. Working Pres. : 300 PSI.
- Max. Working Temp. : 130 deg C.
- Specific Gravity : Min. 0.34.
- Lining Material : Teflon, Rubber.

OPTIONS

■ Scale Plate -Unit : centi-meter[Cm] as standard and others are also available an request.	■ Drain - Plug Valve. - Nipple & Cap.

SMF-50ALD for Corrosive Fluid is
Used for observing the corrosive fluid effectively by lining all the wetted part of this type.

SPECIFICATIONS

- Column Size : DN50.
- Schedule : SCH 10S, 20S, etc.
- Flange Rating : 150LB ~ 300LB.
- Material : 304SS, 316SS, 316LSS Titanium, Monel, etc.
- Max. Working Pres. : 300 PSI.
- Max. Working Temp. : 350 deg C.
- Specific Gravity : Min. 0.34.

SMF-50AU is
Used for observing the fluid in underground tanks or tanks under manhole.

OPTIONS

■ Scale Plate
-Unit : centi-meter[Cm] as standard and others are also available an request.

FOR UNDERGROUND TANKS

SMF-50AU

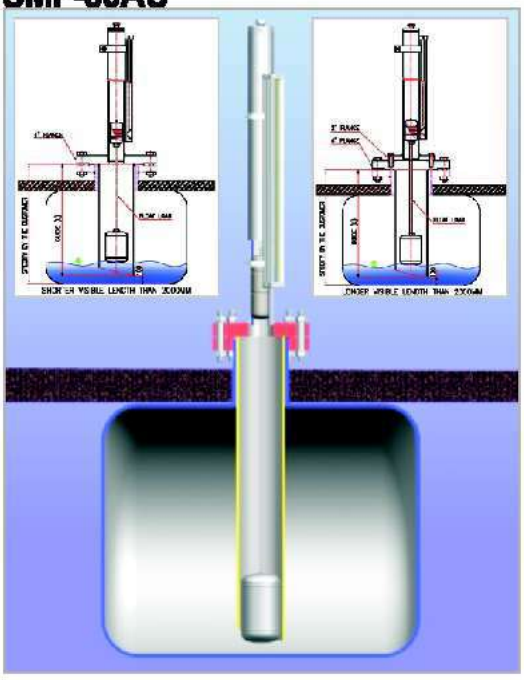

Others, except the above specification are available on request by customer.

This Assembly is suitable for alarm and control of various liquid, any fluid can be observed by through its central control system.

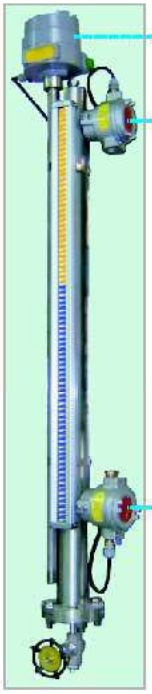

SPECIFICATIONS

MODEL	SEMS-90 [Level Switch]	SCF-1 [Level Transmitter]
Max. DC-A	0.5 / 0.25A	4 ~ 20 mA
Max. AC-V	125 / 220V	24 V
Temp. Range	-20 ~ 150°C	80°C
Condult	PF 1/2	PF 1/2
Remark	Exd ⅡB + H_2 T4	Exd ⅡB T4 IP65

SEMS-90 is
The Level Switch is installed on a certain place of column or magnet chamber. It operates **ON-OFF** control by means of magnetic force of the float when it comes up or down the exact place of switch located.

LEVEL SWITCH

Alarm switch has the self-holding type leed switch. That is, when the **N** pole of magnet float coming near, the switch will be closed **[ON]**, after the magnetic float passed by, the switch still remain closed **[ON]**. and when the magnet is coming back, the switch will be opened **[OFF]** again. and after the magnet passed away, the switch still remain open **[OFF]** also.

When the switch is installed in the opposite direction, the **ON-OFF** operation of the former will be reversed. Therefore, the operation **[ON-OFF]** is easy to change on the side.

LEVEL TRANSMITTER

Used for detecting the level of measuring object from various level in the vessels or tanks and for transmitting it after converting to electric output signal and direct indication can also be possible with flapper colors.

A transient changing of liquid level is continuously transmitted by converting change of resistance value of level switch installed on the chamber.

FEATURE

As our switch has no polarization, There is little point in arguing about an electric circuit whether wires are connected with terminal 1 or 2.

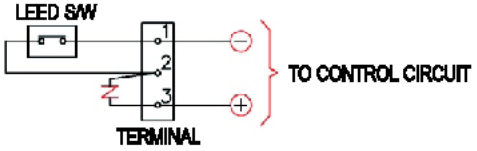

Others, except the above specification are available on request by customer.

DIMENSIONAL VIEW

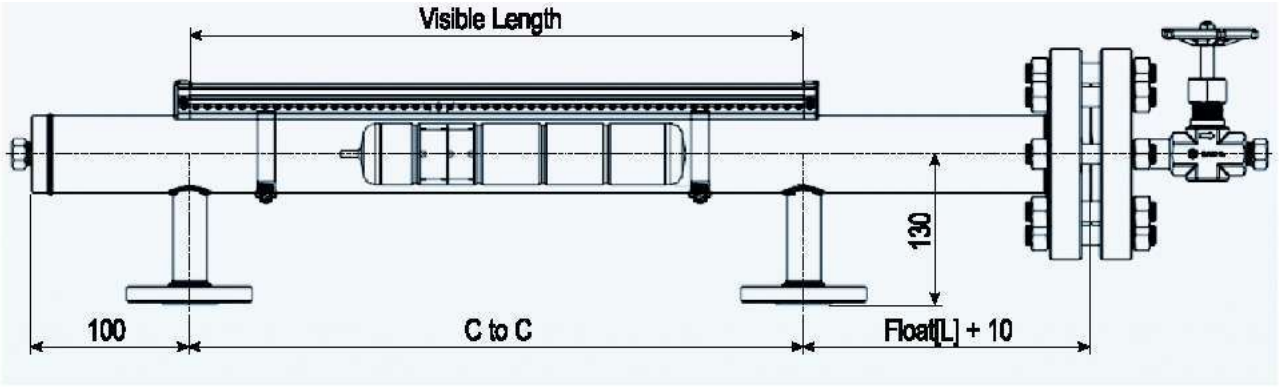

Float Lengths are totally difference depend on the specific gravity of liquid.

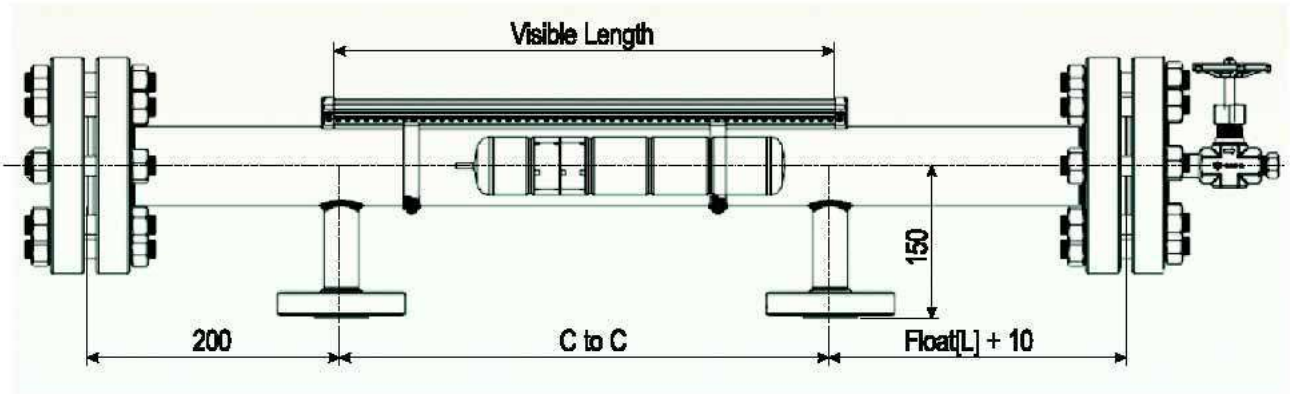

TYPICAL CONSTRUCTION

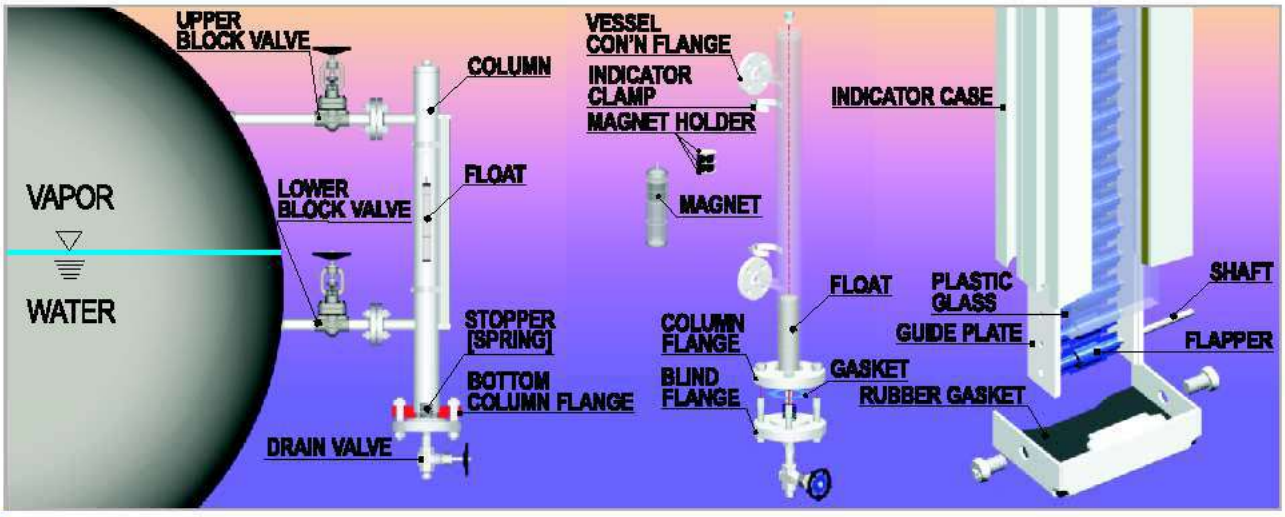

DATA SHEET

SINCE 1979
SAM IL INDUSTRY CO.,LTD.

LEVEL GAUGE
[MAGNETIC FLOAT TYPE]

NO.	BY	DATE	REVISION

SHEET :	OF
SPEC. NO.	REV.
CONTRACT	DATA
REQ. P.O.	

BY	CHK'D	APPR.

					1	2	3	4
GENERAL		1	Item No.					
	✳	2	Tag No.					
	✳	3	QTY					
		4	Model No.					
FLUID DATA	✳	5	Fluid Name					
	✳	6	Press.@ Oper. [kg/cm² G]					
	✳	7	Temp.@ Oper. [°C]					
		8	Press.@ Design[kg/cm²G]					
		9	Temp.@ Design[°C]					
	✳	10	Sp • Gr. @ Operating					
GAUGE	✳	11	C to C Length [mm]					
	✳	12	Visible Length [mm]					
	✳	13	Connection Size					
	✳	14	Material	Column				
	✳	15		Flange				
	✳	16	Drain	Plug				
				Valve				
				Flange				
ACCESSORIES OR OPTIONS	✳	17	Calibration Scale					
	✳	18	Leed Switch					
	✳	19	Transmitter					
		20	Others					

REMARK : "✳" MARKED COLUMNS SHOULD BE FILLED UP BY CUSTOMER NECESSARILY [OR IF POSSIBLE].
NOTE :

samilind79@samilind.co.kr



HEAD OFFICE & FACTORY

405-848
#434-12, 44B-12L, NONHYUN - DONG,
NAMDONG-GU, INCHEON, KOREA
TEL : 82-2-2618-2000 ~ 4
82-32-819-9671 ~ 7
FAX : 82-32-819-9693 ~ 4
WEB PAGE : www.samilind.co.kr
E-MAIL : samilind79@samilind.co.kr

SAM IL INDUSTRY CO.,LTD.

Without permission, Duplicate or Reproduction prohibited. First Published on 05 Sep. 2005

SAMIL INDUSTRY CO., LTD

Electrode Type Level Gauge, Level Transmitter & Level Switch

SEL Series



SAM IL INDUSTRY CO., LTD.

TÜV CERT
DIN EN ISO 9001

CE



Electrode Type Level System SEL Series

Electrode type level system SEL series by Samil Industry Co., Ltd. is an electrode type level gauging, developed based on long experience and accumulated technology in the level gauging field. As an improved version from existing products, this item is the next generation electrode type level system for high temperature and high-pressure applications that offers multiple capabilities digital including complex functions by integrating modern and sofware application technologies.

Electrode Type Level System SEL Series

Electrode type level gauge indicates level status from the display equipment by identifying electric resistance of water and steam from electrode sensors.
The level of water portion displays each level in green and the steam portion displays it in red on the indicator of the Micro Processor controller Unit (MPU) installed at site and the Remote Indicator Unit (RIU) in control room etc.

Features of Electrode Type Level Gauge

- Useful for observing levels of water and detecting signals in high temperature and high pressure boiler drums or steam generators for in power plants.
- Possible to select and install electrode sensors in quantity and positions as per user demand. (Max. 32 Ports)
- Electrode sensors may be installed on water columns at 15~25mm minimum intervals.
- Transmits information on detection level and status to the communication signal(RS 485).
- Indicates detection levels and statuses on site and remote indicators by level points or percentage in letters and figures of red, green, and amber on LED.
- Indicates and sets alarm points up to a maximum of 10 points, and produces relevant contact output.(SPDT)
- Possible to change alarm points without wiring work, via a program.
- Capable of operating level gauge, transmitter, or level switch with one set of device.
- Supports Man Machine Interface(MMI) system for computer monitoring.
- Simple replacement of existing level gauges and level switches.
- Competitive pricing.
- Possible to view minimum level information with battery backup system during power interception or power interruption.

Application of Electrode Type Level Gauge

SEL-G Series Electrode Type Level Gauge

- Possible to use level information and contact points necessary in each electrode.
- Useful for observing water levels and detecting signals of boiler and etc. in high temperature/pressure thermal power plants.
- Used for observing water levels in high temperature/pressure equipment.
- Adopts static voltage/frequency device that can be used anywhere in the world.
  (Free Voltage 86~265V AC, 48~65 Hz)
- Indicates water levels and alarm, input/output board, on indicator of MPU and Remote Indicator.
- Capable of executing level gauge, level transmitter, and level switch functions with one device.
- Capable of providing transmitter functions using level gauge.(0~20 mA / 4~20mA Analog output)
- Compatible to 4~20mA analog input. (Max. 3 Inputs)
- Capable of supporting Remote Indicator Units (RIU).
  (Remote monitoring function utilizing more efficient communication signals than remote monitorings that use existing CCTV and etc.)

SEL-S Series Electrode Type Level Switch

- Use for level alarm contact and control of level.
- It is possible to output a maximum of 10 alarm relay contacts.
- Adopts constant voltage/frequency that can be used anywhere in the world.
  (Free Voltage 86~265V AC, 48~65 Hz)
- Capable of supporting Remote Indicator Units (RIU).
  (Remote monitoring function utilizing more efficient communication signals than remote monitorings that use existing CCTV and etc.)



Electrode Type Level System

Comparison of Characteristics between Electrode Type Level Gauge and Magnetic Float type and Direct Reading Level Gauge

Comparison items	Electrode type	Magnetic Float type	Gauge Glass type	Remarks
Level detection method	Electrode detection (Indirect observation by LED)	Magnetic Flapper Color (Indirect observation)	Direct reading (Visual direct observation)	Easy observation of water level Minimum gauging error
Maximum pressure	300 Kg/cm^2	180 Kg/cm2	150 kg/cm^2	Used in saturated vapor and ultra high temperature
Maximum temperature	560℃	380℃	380℃	Used at a maximum of up to 560℃
Maintenance cost	Almost none	Almost none	Frequent necessary costs consumed (labor cost)	Cost reduction effect
Control signal	Transmission signal (Communication type)	Transmission signal (Impossible for high temp)	None	Efficient remote transmission and monitoring
Remote observation	By transmission signal (RS485 communication signal)	By transmission signal (Impossible for high temp) or CCTV	CCTV	Cheap remote observation (up to 1.6km)
Leak	Almost none	Almost none	Concerns for leaking due to aging of glass, gasket, and etc.	Reduction of leak occurrence
Safety	Excellent safety for high temp./ pressure environments	Concerns for float malfunctioning	Concerns for glass and gasket witn corrosions	Excellent operation at high temp/ pressure environment
Amount	Medium	A little cheap	Medium	Maximum usability compared to cost
Component change	2 years	1.5 years	6 months	Extension of part change period

※ Reference

It was common to install 2 set of glass type level gauge (direct reading type) in existing high temperature/pressure boilers, but it has recently become more common to install 1 set of glass type level gauge (direct reading type) for a single boiler as a rule and to install 1 set of indirect level gauge.

Today, it is common to adopt electrode type level gauge to have all its the advantages in addition to direct reading type in order to control more efficiently and use as a stable and safe level gauge system.

※ Examples of boiler drum installation at a thermal and complex thermal power plant

Boiler drum level system for medium low temperature/pressure
- Level Transmitter (2 Set)
- Direct Reading Type Level Gauge (1 Set)
- Electrode Type Level Gauge (1 Set)

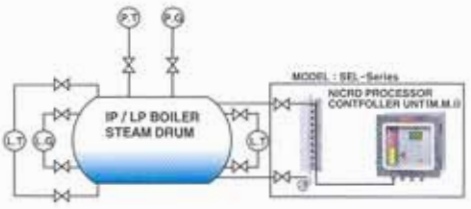

Boiler Drum Level System for medium low temperature/pressure

Boiler drum level system for high temperature/pressure
- Level Transmitter (3 Set)
- Level Switch (2)
- Direct Reading Type Level Gauge (1 Set)
- Electrode Type Level Gauge (1 Set)

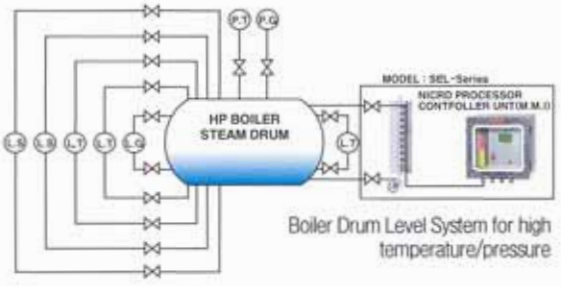

Boiler Drum Level System for high temperature/pressure



Electrode Type Level Gauge SEL- G Series

SEL-G Series Electrode Type Level Gauge

Composition of Electrode Type Level Gauge SEL-G Series

Detection Part

Micro Processor controller Unit (MPU)

Remote Indicator Unit (RIU) – Optional

Computer monitoring – Man Machine Interface (MMI) System – Optional

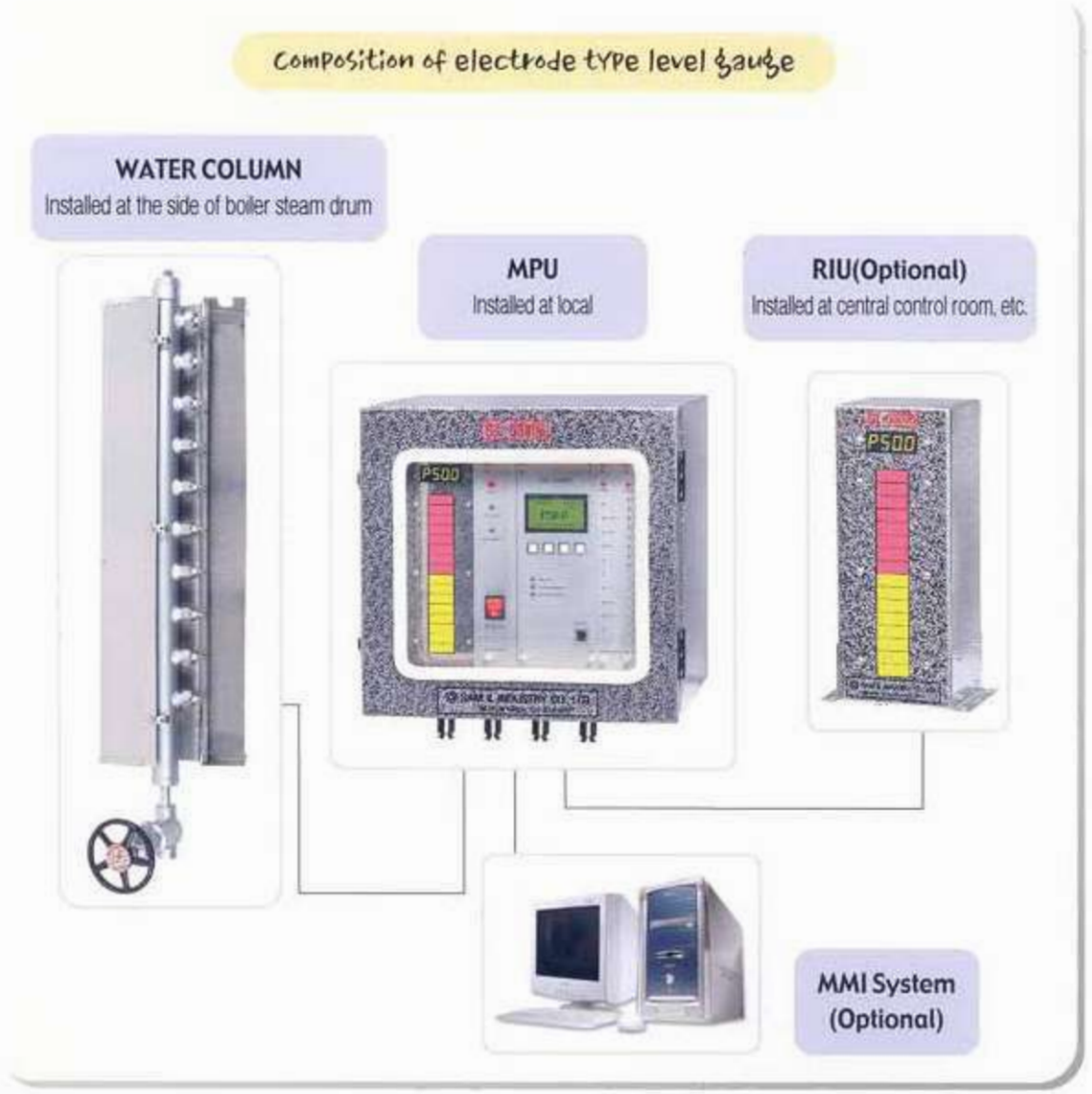



Electrode Type Level Gauge SEL-G Series

Detection Part

The detection part of SEL-G series electrode type level gauge is composed of a water column and some electrode sensors.

The electrode sensor is installed to a water column, a device connected to a high temperature/pressure vessel with different thermal conductivity in fluids.

The protection case is installed in order to avoid damage generated due to pressure eruption and etc.

Maximum pressure: 300 Kgf/cm²

Maximum temperature: 560℃

※ **Reference**

Critical pressure: 22.1 Mpa

Saturation temperature: 374℃

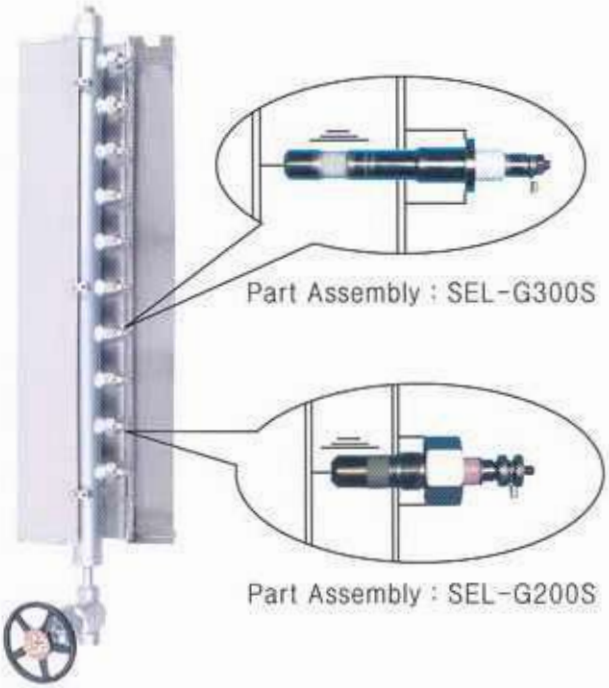

Specification

		Medium/Low Temperature & Medium/Low Pressure Use	High Temperature/Pressure Use
Water Column Part Assembly		SEL-G200W	SEL-G300W
Electrode Sensor Part Assembly		SEL-G200S	SEL-G300S
Pressure Kg/cm²		50	300
Temperature℃		180	560
Material	WATER COLUMN	A106Gr.B / Sch 80 or customer specification	A106 Gr.B / Sch 160 or customer specification(A335 P11, P22, P91)
	ELECTRODE SENSOR	316SS+PTFE	316SS+ CERAMIC
Connection		Customer specification	Customer specification



Electrode Type Level Gauge SEL-G Series

Control Panel & Control System - Micro Processor controller Unit (MPU)

The electrode sensor and detection portions' control panel are connected by electric wire, and the level signal detected at an electrode sensor is sent to a Micro Processor control Unit (MPU) of the MPU panel.

Length of the Electric wire between detection portion and control panel is to be within 30m.

The MPU panel is equipped with a Micro Processor control Unit.

The MPU panel is composed of a level indicator, a CPU Module, a power supply Module, an input Module, an output Module, a terminal board, and etc.

Level Indicator – The part with water is displayed in green and the part with steam is displayed in red. And, abnormality or defect status are indicated in amber and relevant LED flickers.

CPU Module – Equipped with control defect detection and self diagnosis function of by each signal.
- Can select and indicate level point(LP) or percentage(P) of level status using a simple function key.
- Can change and set time, date, and operation mode using a function key.
- Can detect and diagnose LED abnormality, electrode disconnection, short circuit, and etcetera of each module.

Power Supply Module – Constant voltage, constant frequency circuit, and internal voltage supply. (Dual Power System)

Input Module – A maximum of 32 point electrode inputs and a maximum of 3 sets of 4~20mA signal inputs. (4~20mA signal from transmitter for temperature, pressure, flow rate, etc. around boiler.)

Output Module – A maximum of 10 relay contacts, analog output, RS 485 communication signal, and man machine interface(MMI) output.

Terminal Board – All external wires are connected.

Specification of the Micro Processor Controller Unit

Controller

Medium/low temperature and low pressure : Part Assembly SEL-G200C
High temperature/pressure : Part Assembly SEL-G300C
Size : 222(W) x 180(D) x 316(H) mm
Working Voltage: Free voltage – constant voltage and constant frequency(86~265V AC / 48~65 Hz)
Dual Power : DC 12V (For Recharging)
Operation temperature: -20℃~75℃

Enclosure

Standard: 400(W) x 250(D) x 400(H) mm
17 Points or more 400(W) x 250(D) x 550(H) mm
Material: Stainless Steel 304/ Wall Mounting / IP65 / NEMA 4

Features

Electrode input: Maximum 32 Points
Alarm indication: Amber
Alarm relay contacts : Maximum 10 sets(AC 250V 1A)
Can support communication signal for Remote Indicator Unit (RIU).
Can support Man Machine Interface(MMI).

Display example

LP08 – Level Point indication
P60.5 – Percentage indication





Electrode Type Level Gauge SEL-G Series

Electrode Type Level Gauge Remote Indicator Unit (RIU)- Optional

This is an indicator unit for remotely monitoring operation status of level gauge, installed at the control room and being connected with MPU panel.(Maximum 1.6km)

Water level part is indicated on LED in green color, steam part is indicated in red color and waming part is in amber color, and indicated in numerical figures.(Level point or percentage)

Specification of the Remote Indicator Unit

Medium/Low Temperature/Pressure : Part Assembly SEL-G200R
High Temperature/Pressure: Part Assembly SEL-G300R

Enclosure Material	Stainless Steel 304
Size	160(W) x 100(D) x 300(H) mm - Standard
	160(W) x 100(D) x 500(H) mm - 17 Points or more
Display	Red / Green / Amber
Power	DC 12V (Standard)
	Free Voltage (86 ~ 265V AC / 48 ~ 65 Hz)



Computer Monitoring MMI (Man Machine Interface) System - Optional

It is possible to adopt the Man Machine Interface system on a PC and etc. using communication signals transmitted from the micro processor control unit in order to view and control site situations for status of SEL-G series electrode type level gauge.

It is possible to look at operational status and site situation of level gauge through a computer and etc. at specific positions.

Part Assembly SEL-G200M / SEL-G300M



Electrode Type Level Switch SEL-S Series

SEL-S Series Electrode Type Level Switch

This is installed at high temperature/pressure boiler drums and steam generators to be used in observing or controlling water level statuses.

Composition

Detection Part

Control system – Micro Processor controller Unit (MPU)

Remote Indicator Unit (RIU) – Optional



Contact points of level switch can be outputted up to a maximum of 10 sets.



Electrode Type Level Switch SEL-S Series

Detection Part

Electrode sensors of SEL-S series electrode type level switch must be appliance on process lines with desired quantity and position suitable for use by identifying it into low pressure and high temperature/pressure.

The appliance electrode sensor functions as a detector that detects liquid level and alarm.

Maximum Pressure: 300 Kgf/cm2

Maximum Temperature: 560℃

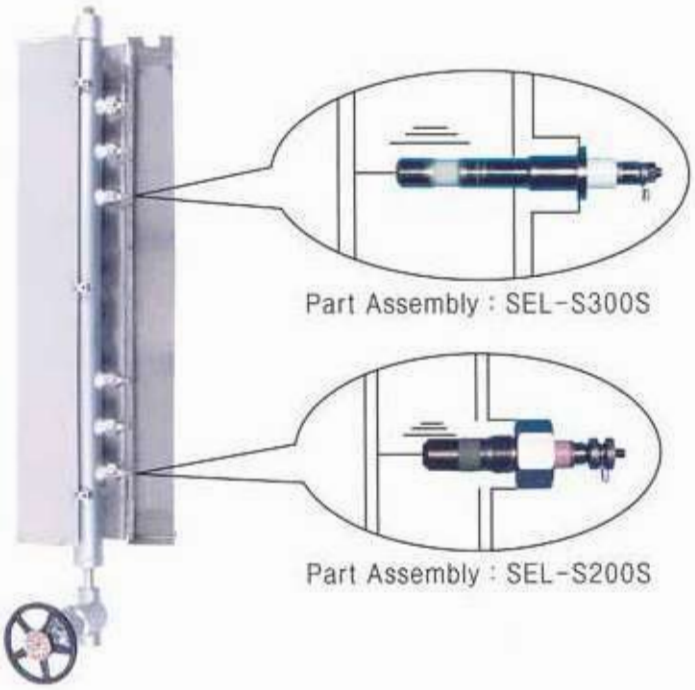

Specification

		Medium/Low Temperature & Medium/Low Pressure Use	High Temperature/Pressure Use
Water Column Part Assembly		SEL-S200W	SEL-S300W
Electrode Sensor Part Assembly		SEL-S200S	SEL-S300S
Pressure Kg/cm²		50	300
Temperature℃		180	560
Material	WATER COLUMN	A106Gr.B/Sch 80 or customer specification	A106 Gr.B / Sch 160 or customer specification(A335 P11, P22, P91)
	ELECTRODE SENSOR	316SS+PTFE	316SS+ CERAMIC
Connection		Customer specification	Customer specification



Electrode Type Level Switch SEL-S Series

Control Panel & Control system - Micro Processor controller Unit (MPU)

This receives and handles liquid level and other signals received from the electrode sensor at relevant position sets or installed position of the SEL-S series electrode type level switch through the Micro Processor controller unit. (MPU)

This displays relevant alarm points on the MPU's display window, together the color red on relevant LED's on Indicator.

This can output a maximum of up to 10 contacts for established alarm points.

Specification of Micro Processor controller Unit

Controller

Medium/Low Temperature/Pressure: Part Assembly SEL-S200C
High Temperature/Pressure: Part Assembly SEL-S300C
Size : 222(W) x 180(D) x 316(H) mm
Working voltage : Free Voltage constant voltage/frequency(86 ~ 265V AC / 48 ~ 65 Hz)
Dual Power : DC 12V (For Recharging)
Operation temperature: -20℃ ~ 75℃

Enclosure

Size : 400(W) x 250(D) x 400(H) mm
Material: Stainless Steel 304SS / Wall Mounting / IP65 / NEMA 4

Features

Electrode input : Maximum 10 Points
Alarm indication : Red
Alarm contact : Maximum 10 sets(AC 250V 1A)
Can support communication signals for remote indication units (RIU).

Examples of alarm indication:

HHHA - High high high Alarm
HHAL - High high Alarm
H-AL - High Alarm
L-AL - Low Alarm
LLAL - Low low Alarm
LLLA - Low low low Alarm





Electrode Type Level Switch SEL-S Series

Remote Indicator Unit (RIU) - Optional

The remote indicator unit of SEL-S series electrode type level switch must be installed at a place requested by the user to make it interlock with the indicator system of micro processor controller unit.

Adopts static voltage/frequency device that can be used anywhere in the world.
(Free Voltage 86 ~ 265V AC, 48 ~ 65 Hz)

Installation distance of the remote indicator unit can be a maximum of up to 1.6km away from the micro processor controller unit.

Specification of the Remote Indicator Unit

Medium/Low Temperature/Pressure Part Assembly SEL-S200R
High Temperature/Pressure Part Assembly SEL-S300R

Enclosure material	Stainless Steel 304
Size	160(W) x 100(D) x 300(H) mm - Standard
Display	Red
Power	DC 12V (Standard) Free Voltage constant voltage/frequency (86~265V AC / 48~65 Hz)



※ Typical Applications of Electrode type Level Switch

Turbine water induction prevention.
Steam line drain control.
Boiler water high level protection.
Feedheater boiler low level protection.
Dearator level protection.

A SEL-S Series Level Switch installed on the drain port in the superheated steam line will detect the level of condensed water in the port.

A single electrode sensor can be used, but for better protection a two electrode sensor ensures trouble free, fault tolerant water detection.

ELECTRODE TYPE LEVEL GAUGE SYSTEM

ORDERING CODE

CODE NAME SEL - [G] [300] [B] [03] [B] [0] [B] [000]

- SPECIAL OPTION
  - [0] NON SPECIAL
  - [1] REMOTE INDICATOR UNIT (RIU)
  - [2] MAN MACHINE INTERFACE (MMI)
  - [3] ANALOG INPUTS
- CONNECTION TYPE
  - [F] FLANGE
  - [S] SOCKET WELDING
  - [B] BUTT WELDING
  - [O] OPTION
- NUMBER OF OUTPUT (RELAY CONTACT)
  - [00] NONE
  - [10] 1 ~ 10 SPDT
- C TO C LENGTH
  - [A] 100 ~ 500mm
  - [B] 501 ~ 1000mm
  - [C] 1001 ~ 1500mm
  - [D] 1501 ~ 2000mm
  - [E] 2001mm ~
- NUMBER OF ELECTRODE SENSORS
  - [03] 1 TO 32
- BASIC CONSIST OF
  MICRO PROCESSOR CONTROLLER UNIT(MPU)
  WATER COLUMN
- TYPE OF RATING
  - [200] LOW TEMP. & PRESSURE
  - [300] HIGH TEMP. & PRESSURE
- TYPE OF IMPLEMENT
  - [G] LEVEL GAUGE
  - [S] LEVEL SWTICH
  - [T] LEVEL TRANSMITTER

SAM IL INDUSTRY CO., LTD.

TÜV CERT DIN EN ISO 9001 CE

HEAD OFFICE & FACTORY
#434-12, 44B-12L, NONHYUN-DONG,
NAMDONG-GU, INCHEON, KOREA 405-848
TEL : +82 2 2618-2000~4
+82 32 819-9671~7
FAX : +82 32 819-9693~4
E-mail : samilind@chollian.net
Home page : www.samilind.co.kr

Unauthorized copy prohibited.
Published on 3rd Apr. 2003

SAMIL INDUSTRY CO., LTD